AQUA AIR
MARINE AIR CONDITIONING SYSTEMS

DRAW-THRU FAN COIL **WC SERIES**

Standard Features

- **Fan coil units in 4-24,000 BTU/H (1,008-6,045 KCAL/H) sizes.**
- **Available in 115-1-50/60 input or 220/230-1-50/60 input models.**
- **Can be used with either cooling only or reverse cycle (heating/cooling) systems**

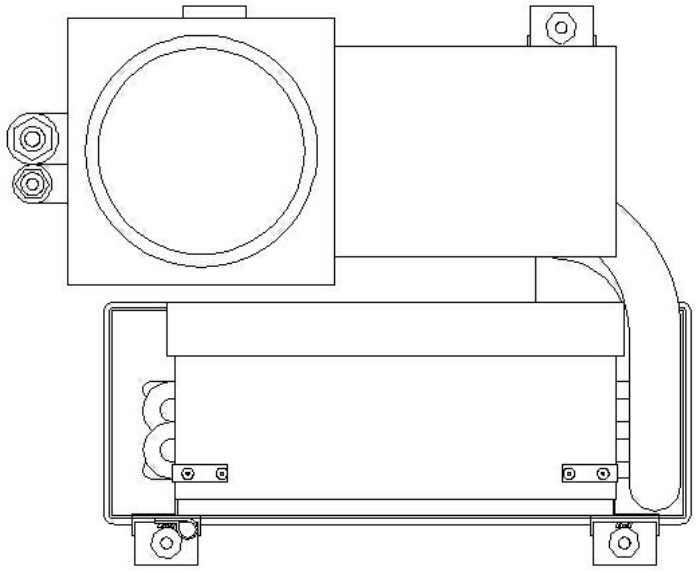

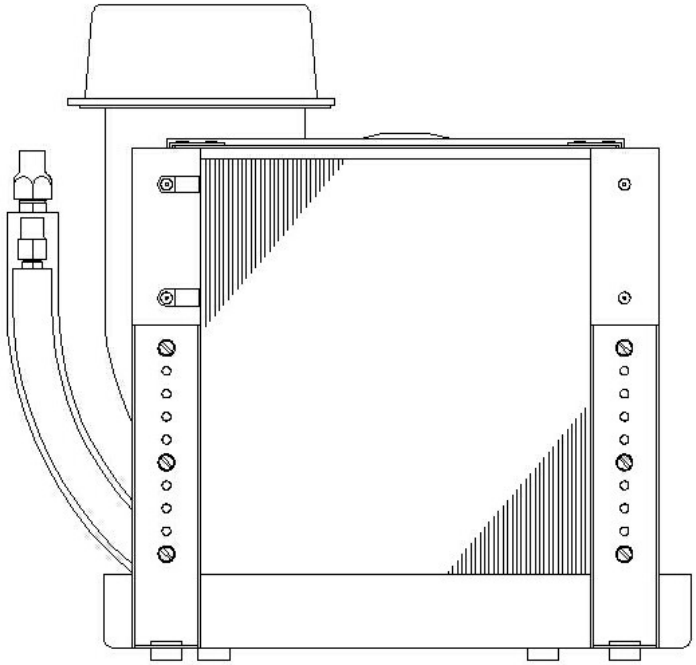

- **Rotatable blower for ease of ducting**
- **High capacity motorized impeller blower is designed for quiet operation with flexible duct systems**
- **Standard flexible duct connector is installed standard on the blower discharge. This connector also directly adapts to the Aqua-Air AT series adapter duct tees.**
- **Dual condensate drain outlets on the drain pan are factory connected into a common ½" hose barb tee for ease of installation.**
- **Antifungal, anti-slosh foam media is installed in the internally corrosion resistant coated drain pan.**
- **All external condensate producing surfaces are covered with 1/8" thick foam insulation.**
- **Vertically adjustable mounting legs with rubber vibration pads and mounting screws.**
- **Refrigerant line connections are 18" long. Flare fittings with flare nuts are provided.**
- **Removable lint screen installed on the front of the coil.**
- **A plastic clamp is installed on the face of the unit for mounting the thermostat sensor.**
- **Designed for use with either the K(H) Series, F(H) Series or ADX Series condensing units.**
- **Can be used with either a three knob manual control (AQS1 or AQS3 Series) or the Sapphire digital thermostat.**
- **Ideal for mounting low in the bottom of closets or under seats or bunks.**

Technical Specifications

Model			WC-04	WC-05	WC-06	WC-07	WC-08	WC-10	WC-12	WC-16	WC-24
Cooling Capacity		BTU/H KCAL/H TONS	4,000 1,008 0.33	5,000 1,260 0.42	6,000 1,764 0.58	7,000 1,764 0.58	8,000 2,016 0.67	10,000 2,520 0.83	12,000 3,024 1.00	16,000 4,032 1.33	24,000 6,045 2.0
Air Flow		CFM m^3/HR	135 230	135 230	200 340	270 460	270 460	330 560	400 679	533 904	800 1357
Weight		LBS. KGS.	13 6	13 6	15 7	15 7	15 7	24 11	28 13	30 14	37 17
Width	W	IN MM	12-3/4" 324	12-3/4" 324	12-1/2" 318	12-1/2" 318	12-1/2" 318	13" 330	15-3/8" 391	15-3/8" 391	21" 533
Depth	D	IN MM	11" 280	11" 280	12" 305	12" 305	12" 305	12" 305	14-1/4" 362	15" 384	16-1/2" 419
Height to Top of the Coil	H 1	IN MM	9-1/2" 241	9-1/2" 241	10" 254	10" 254	10" 254	11-1/2" 292	13" 330	13" 330	16-5/8" 422
Height (Maximum)	H 2	IN MM	12-1/4" 311	12-1/4" 311	13" 330	13" 330	13" 330	14-1/4" 362	15-1/2" 394	15-1/2" 394	16-5/8" 422
Hose Adapter Diameter		IN MM	4 102	4 102	5 127	5 127	5 127	5 127	6 152	6 152	7 178
Amperage Draw		115v	1.6	1.6	1.6	1.6	1.6	1.6	1.6	2.6	N/A
		230v	0.8	0.8	0.8	0.8	0.8	0.8	0.8	1.2	1.7
Power		Watts	182	219	182	219	182	219	219	275	375
Minimum Return Air Grille Size		IN^2 CM^2	64 413	64 413	72 465	100 645	100 645	100 645	120 775	144 930	240 1550
Minimum Supply Air Grille Size		IN^2 CM^2	32 206	32 206	40 258	48 310	48 310	48 310	60 387	72 465	120 774
Flare Size		Suction	3/8"	3/8"	3/8"	3/8"	3/8"	3/8"	3/8"	1/2"	1/2"
		Liquid	1/4"	1/4"	1/4"	1/4"	1/4"	1/4"	1/4"	1/4"	3/8"

Add 'C' to the end of the model number for a 230 volt unit. Example: WC-12C I:\wordpfct\80047.wpd
All Fan Motors are PSC Motorized Impellers.

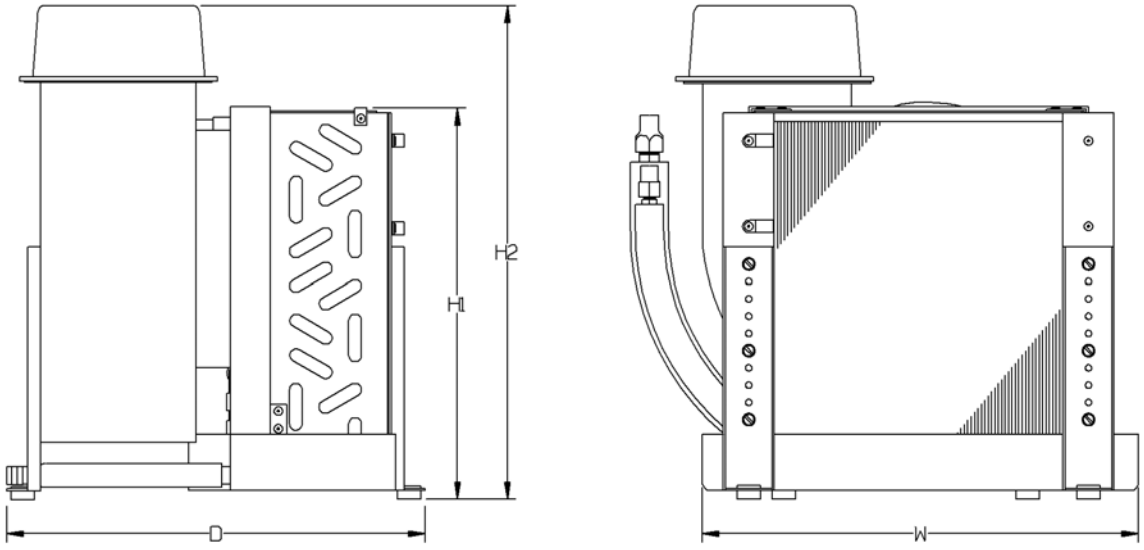

AQUA-AIR MANUFACTURING, division of the James D. Nall Co., Inc.
1050 East 9th Street, Hialeah, Florida 33010 U.S.A.
Ph. 305-884-8363 Fax 305-883-8549 sales@aquaair.com www.aquaair.com

AQUA AIR
MARINE AIR CONDITIONING SYSTEMS

FAN COIL - BLOW-THRU AQB SERIES

The AQB series cooling / heating units are compact, blow-thru type units that are designed to be mounted in the top of a locker, cabinet or closet at a minimum of 36" from the cabin floor. Cool air is discharged directly from the unit without the use of ducts. Return air is supplied to the unit from behind. The properly sized supply air grill is mounted in front of the unit.

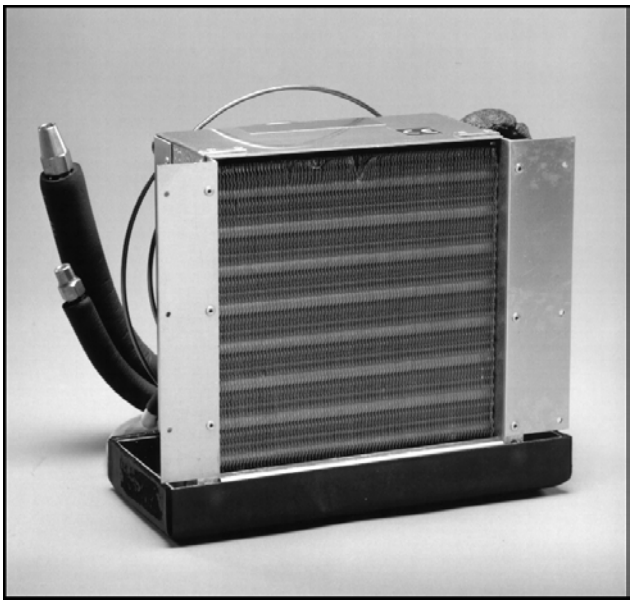

AQB Series

Matching Remote Condensing Units

KH - compatible with AQS1 and AQS3 three knob mechanical controls.
KHL - Includes low pressure switch.
KHT - compatible with **TW2** Micro-processor control.
KHTL - Includes low pressure switch.
FH-24 - mechanical control compatible.
FHT-24 - TW2 control compatible.
AQFH- mechanical control compatible.
AQFH-T - TW2 control compatible.

Standard Features:

- Fan coil units in 4 - 16,000 BTU/H (1,008 - 4,032 KCAL/H) sizes.
- Available in 115-1-50/60 input or 230-1-50/60 input models.
- Can be used with either cooling only or reverse cycle (heat/cool) systems.
- High capacity blade type fan is enclosed in a protective fan guard.
- Mounting flanges are pre-installed.
- Dual condensate drain outlets on the drain pan are factory connected into a common ½" hose barb tee for ease of installation.
- Antifungal, antislosh foam media is installed in the internally corrosion resistant coated drain pan.
- All external condensate producing surfaces are covered with 1/8" thick foam insulation.
- Refrigerant line connections are 18" long. Flare fittings with flare nuts are provided.
- Designed for use with either KH, FH or AQFH Series condensing units.
- Compatible with mechanical (AQS Series) or electronic TW2 controls.
- Two year warranty when used with TW2 microprocessor control.

AQUA-AIR MANUFACTURING, division of the James D. Nall Co., Inc.
1050 East 9th Street, Hialeah, Florida 33010 U.S.A.
Ph. 305-884-8363 Fax 305-883-8549 Email sales@aquaair.com

Technical Specifications

Model		AQB-04	AQ-05	AQB-07	AQB-08	AQB-10	AQB-12	AQB-16
Cooling Capacity	BTU/H KCAL/H TONS	4,000 1,008 0.33	5,000 1,260 0.42	7,000 1,764 0.58	8,000 2,016 0.67	10,000 2,520 0.83	12,000 3,024 1.00	16,000 4,032 1.33
Air Flow	CFM m^3/HR	135 230	135 230	270 460	270 460	330 560	400 679	533 904
Weight	LBS. KGS.	10 5	10 5	10 5	15 7	15 7	17-1/2 8	20 9
Width	IN MM	12-1/2" 318	12-1/2" 318	12-1/2" 318	12-1/2" 318	12-1/2" 318	13" 330	15" 381
Depth	IN MM	7" 178	7" 178	8.5" 216	8.5" 216	8.5" 216	9.5" 241	10.5" 267
Height	IN MM	9" 229	9" 229	9-3/4" 248	11" 279	11" 279	12-1/2" 318	12-1/2" 318
Amperage Draw	115v	.45	.45	.5	.5	.8	1.9	1.9
	230v	.2	.2	.2	.2	.4	1.0	1.0
Power	Watts	52	52	58	58	92	219	219
Minimum Return Air Grille Size	IN^2 CM^2	64 413	64 413	72 465	72 465	100 645	120 775	144 930
Minimum Supply Air Grille Size	IN^2 CM^2	64 413	64 413	72 465	72 465	100 645	120 775	144 930
Flare Size	Suction	3/8"	3/8"	3/8"	3/8"	3/8"	3/8"	1/2"
	Liquid	1/4"	1/4"	1/4"	1/4"	1/4"	1/4"	1/4"

Add 'C' to end of the model for a 230 volt unit. Example AQC-12C

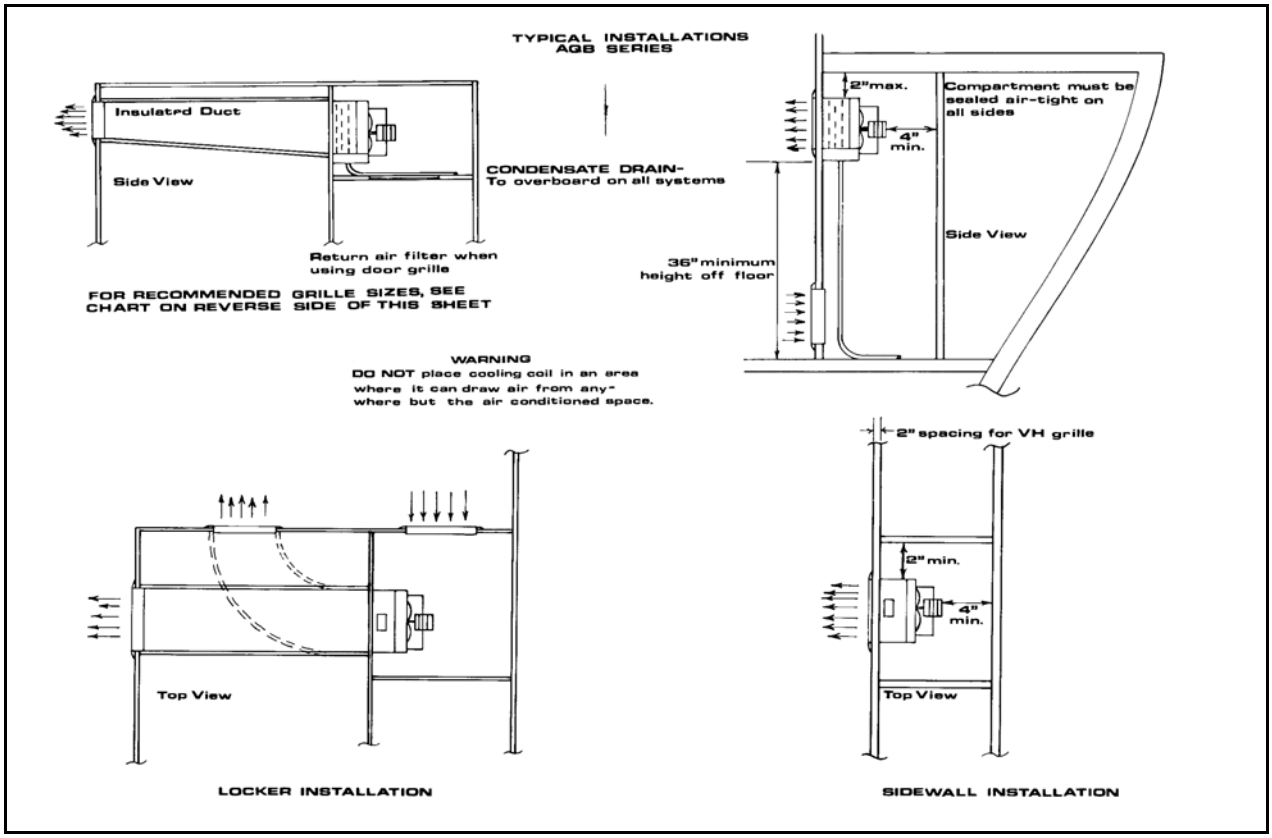

COOLING UNIT

AQUAAIR
MARINE AIR CONDITIONING SYSTEMS

TYPE AQBH

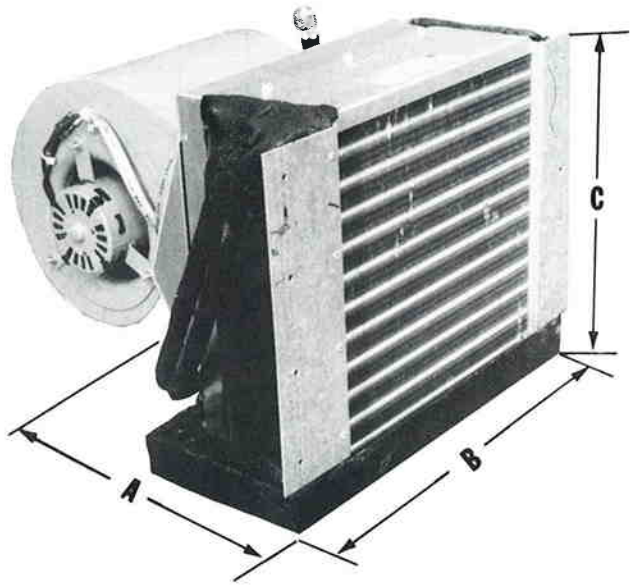

The type AQBH cooling unit is comparable in design to the AQB except that it uses a high pressure blower instead of a fan. It is compatible with duct systems, overhead flybridge systems or for installation in the tops of lockers or cabinets. All units are available in both 115 or 230 volt 50/60 cycles.

SPECIFICATIONS

	AQBH-12	AQBH-16
BTU/HR	12000	16000
TONNAGE	1	1-1/3
CFM RATING	400	530
LENGTH/DEPTH (A)	17.5	17.5
WIDTH (B)	15	15
HEIGHT (C)	12.5	12.5
WEIGHT (LBS)	25	28
VOLTAGE	115	115
FREQUENCY	60	60
WATTS AT 115v	334	334
AMPERAGE AT 115v	2.9	2.9
MINIMUM RETURN AIR (SQ. INCHES)	120	128
MINIMUM SUPPLY AIR (SQ. INCHES)	120	128
FLARE CONNECTION SUCTION LINE	3/8	1/2
FLARE CONNECTION DISCHARGE LINE	1/4	1/4

FOR 230v UNITS, ADD THE LETTER "C" TO THE END OF THE MODEL NUMBER. EX: AQBH-16C

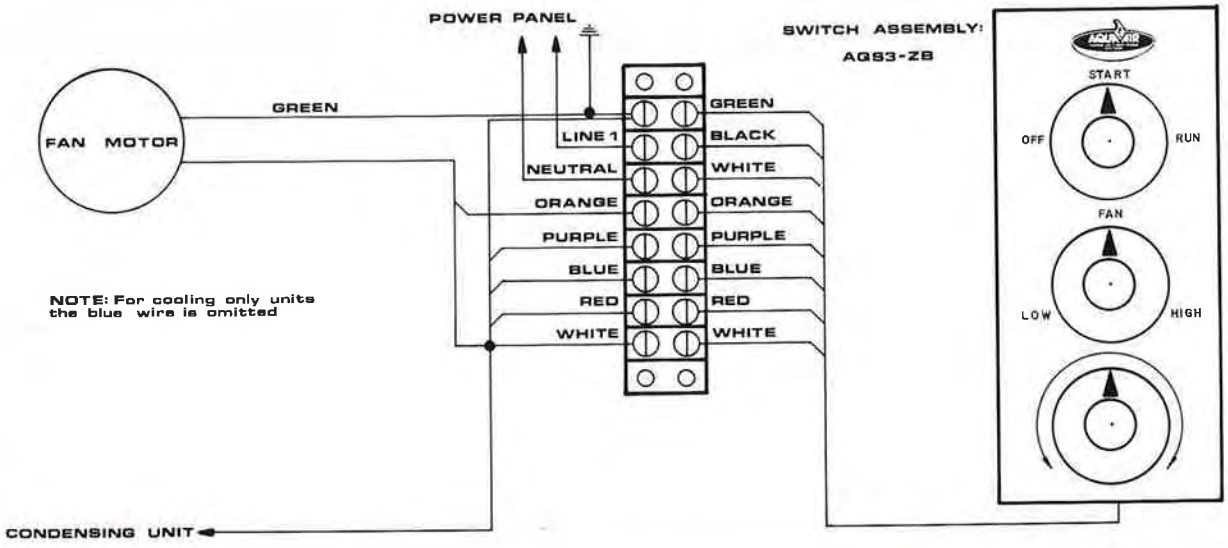

cvs

TYPICAL INSTALLATIONS AGBH SERIES

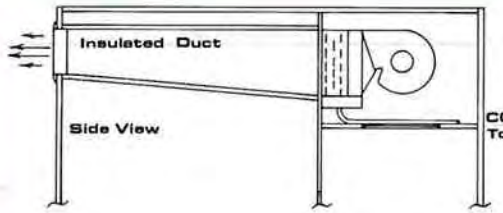

CONDENSATE DRAIN-
To overboard on all systems

FOR RECOMMENDED GRILLE SIZES, SEE CHART ON REVERSE SIDE OF THIS SHEETS

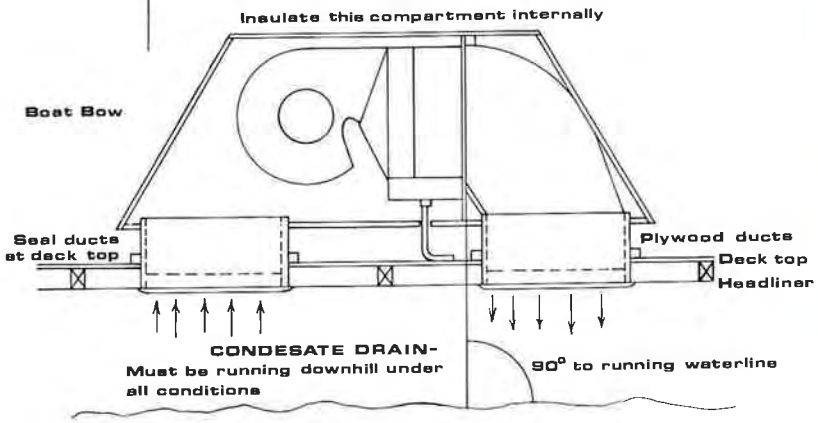

OVERHEAD INSTALLATION

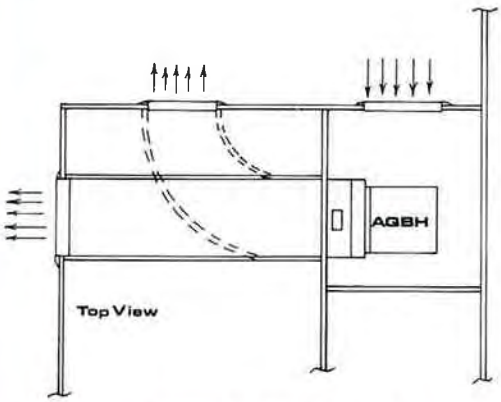

LOCKER INSTALLATION

WARNING
DO NOT place cooling coil in an area where it can draw air from anywhere but the air conditioned space.

AQUA AIR
MARINE AIR CONDITIONING SYSTEMS

TWIN BLOWER COOLING UNIT AQE & AQB2

Twin blower units are designed primarily for overhead installations where height is restricted. Separating the blower assembly and the cooling coil generally results in a quieter installation. Marriage bands connect the individual units to both the return and supply grilles and flexible ducting connects the two units together.

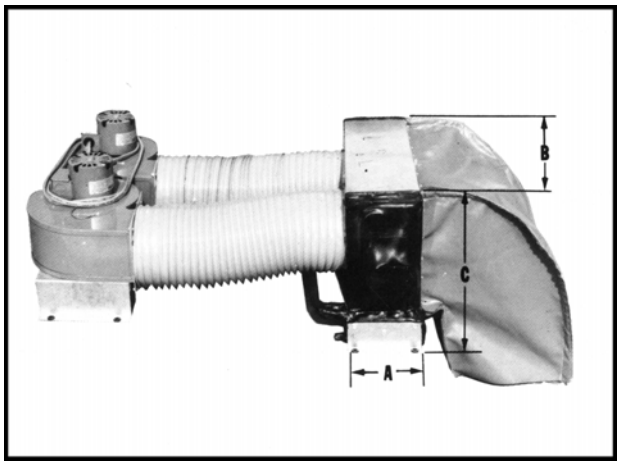

AQE / AQB2 Series

Matching Remote Condensing Units

KH - compatible with AQS1 and AQS3 three knob mechanical controls.
KHL - Includes low pressure switch.
KHT - compatible with **TW2** Micro-processor control.
KHTL - Includes low pressure switch.
FH-24 - mechanical control compatible.
FHT-24 - TW2 control compatible.
AQFH- mechanical control compatible.
AQFH-T - TW2 control compatible.

Standard Features:

- Matching blower and evaporator units in 12 & 16,000 BTU/H (3,024 & 4,032 KCAL/H) sizes.
- Available in 115-1-50/60 input or 230-1-50/60 input models.
- Can be used with either cooling only or reverse cycle (heat/cool) systems.
- High capacity squirrel cage blowers are designed for quiet operation.
- Mounting bases with rubber vibration pads are factory installed on both the blower and evaporator units.
- Dual condensate drain outlets on the drain pan are factory connected into a ½" hose barb tee for ease of installation.
- Antifungal, antislosh foam media is installed in the internally corrosion resistant coated drain pan.
- All external condensate producing surfaces are covered with 1/8" thick foam insulation.
- Refrigerant lines are 18" long. Flare fittings with flare nuts are provided.
- Designed for use with KH, FH or AQFH Series condensing units.
- Compatible with mechanical (AQS Series) or electronic TW2 controls.
- Two year warranty when used with TW2 microprocessor control.

AQUA-AIR MANUFACTURING, division of the James D. Nall Co., Inc.
1050 East 9th Street, Hialeah, Florida 33010 U.S.A.
Ph. 305-884-8363 Fax 305-883-8549 Email sales@aquaair.com

Technical Specifications

			Evaporator Section		Twin Blower
			AQE-12	AQE-16	AQB2
Cooling Capacity		BTU/H KCAL/H	12,000 3,024	16,000 4,032	N / A
Air Flow		CFM m^3/HR	N / A	N / A	500
Weight		LBS. KGS.	16 8	16 8	22 10
Length/Depth	A	IN MM	7" 178	7" 178	11 279
Width	B	IN MM	21-1/2 546	21-1/2 546	21 533
Height	C	IN MM	11 279	11 279	11 279
Amperage Draw		115v	N / A	N / A	3.8
		230v			1.9
Power		Watts	N / A	N / A	438
Minimum Return Air Grille Size		IN^2 CM^2	120 775	120 775	N / A
Minimum Supply Air Grille Size		IN^2 CM^2	120 775	120 775	N / A
Flare Size		Suction	3/8"	1/2"	N / A
		Liquid	1/4"	1/4"	N / A

Add 'C' to end of the model for 230 volt unit. Example: AQB2C

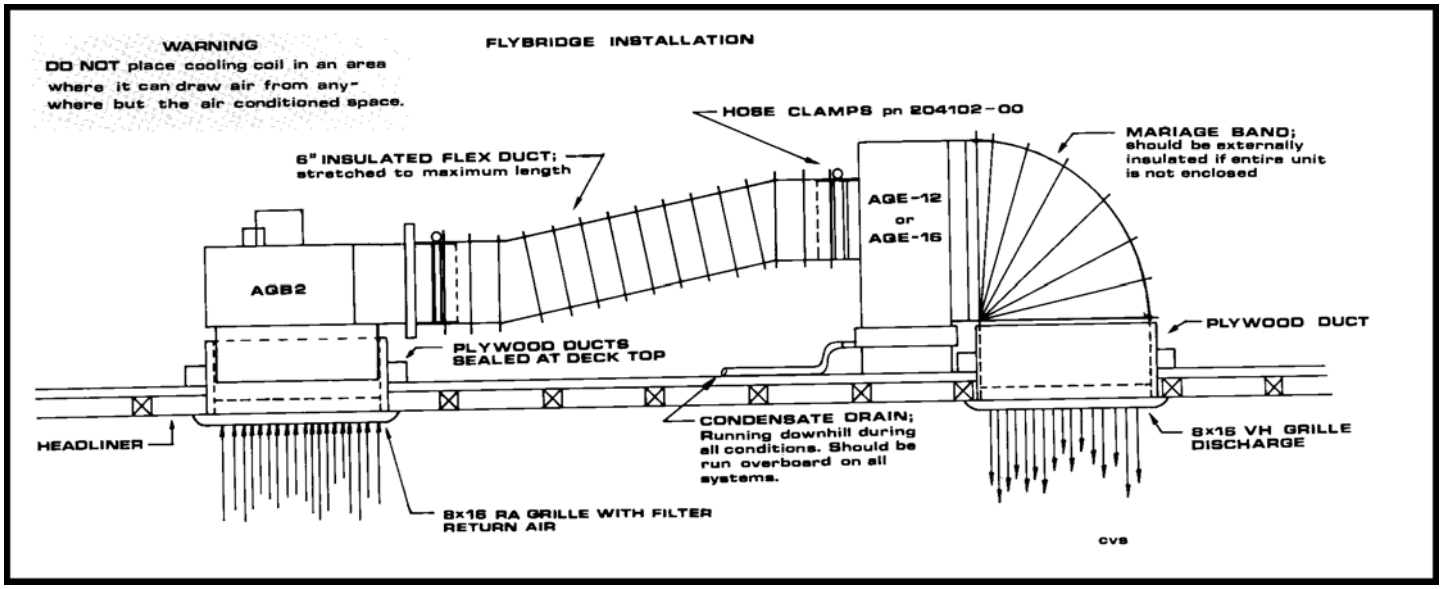

AQUA AIR
MARINE AIR CONDITIONING SYSTEMS

FAN COIL - DRAW THRU AQC SERIES

The AQC series are high capacity, fully enclosed, draw-thru ductable cooling / heating units, designed to be mounted low in a cabinet or locker, with air ducted upward to discharge grills high in the cabin. These highly compact, variable speed units are quiet and efficient, and can be matched with Aqua-Air remote condensing units.

AQC Series

Matching Remote Condensing Units

KH - compatible with AQS1 and AQS3 three knob mechanical controls.
KHL - Includes low pressure switch.
KHT - compatible with **TW2** Micro-processor control.
KHTL - Includes low pressure switch.
FH-24 - mechanical control compatible.
FHT-24 - TW2 control compatible.
AQFH- mechanical control compatible.
AQFH-T - TW2 control compatible.

Standard Features:

- Fan coil units in 12-16,000 BTU/HR (3,024 - 4,032 KCAL/H).
- Available in 115-1-50/60 input or 230-1-50/60 input models.
- Can be used with either cooling only or reverse cycle (cooling/heating) systems.
- Fixed vertical discharge blower.
- High capacity squirrel cage blower is designed for quiet operation with flexible duct systems.
- Standard flexible duct connector is installed on the blower discharge. This connector also adapts directly to the Aqua-Air AT and AY series of duct splitters.
- Antifungal, antislosh foam media is installed in the internally corrosion resistant coated pan.
- Vertically adjustable mounting legs with rubber vibration pads and mounting screws are included. No optional mounting frame is required.
- Top access refrigerant line connections with flare fittings provided.
- Removable lint screen included.
- Compatible with mechanical (AQS1 or AQS3 series) or electronic TW2 controls.
- Thermostat mounting clamps included
- Two year warranty when used with the **TW2** microprocessor control.

Technical Specifications			
Model		**AQC-12**	**AQC-16**
Cooling Capacity	**BTU/H** **KCAL/H** **TONS**	12,000 3,024 1.00	16,000 4,032 1.33
Air Flow	**CFM** **m^3/HR**	400 679	533 904
Weight	**LBS.** **KGS.**	30 13.6	32 14.5
Width	**IN / MM**	15.7 / 398	16 / 406
Depth	**IN / MM**	10.2 / 259	11 / 634
Height	**IN / MM**	13.3 / 338	13.8 / 350
Hose Adapter Diameter	**IN / MM**	6" / 152	
Amperage Draw	**115v**	2.6	3.9
	230v	1.3	1.95
Power	**Watts**	311	460
Minimum Return Air Grille Size	**IN^2** **CM^2**	120 775	144 930
Minimum Supply Air Grille Size	**IN^2** **CM^2**	60 387	72 465
Flare Connection Size	**Suction**	3/8"	1/2"
	Liquid	1/4"	1/4"

Add ‘C’ to end of the model for a 230 volt unit. Example AQC-12C

I:\WORDPFCT\BROC\AQC spec.wpd

AQUA-AIR MANUFACTURING, division of the James D. Nall Co., Inc.
1050 East 9th Street, Hialeah, Florida 33010 U.S.A.
Ph. 305-884-8363 Fax 305-883-8549 Email sales@aquaair.com

AQUA AIR
MARINE AIR CONDITIONING SYSTEMS

FAN COIL - LOW PROFILE BLOW-THRU AQL

The AQL series cooling / heating units are compact, low profile, high capacity, blow-thru type units designed to be mounted in areas where there is a minimum height restriction. These units are ideal for mounting in the top of a locker, cabinet or closet, or in overhead applications. The unit should be mounted at minimum of 36" from the cabin floor.

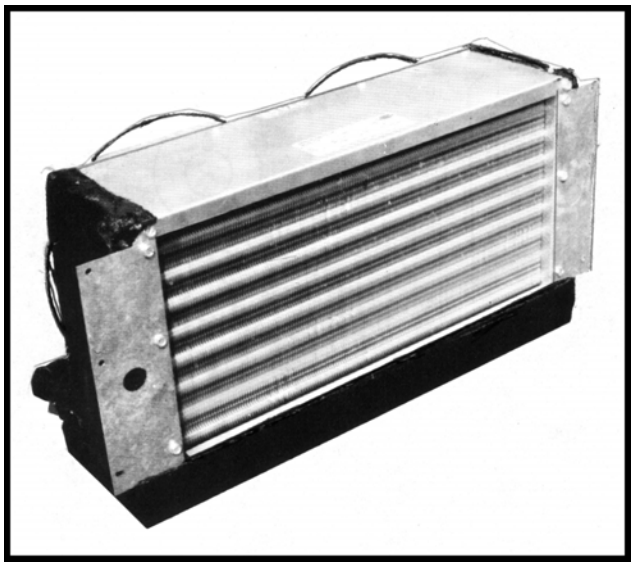

AQL Series

Matching Remote Condensing Units

KH - compatible with AQS1 and AQS3 three knob mechanical controls.
KHL - Includes low pressure switch.
KHT - compatible with **TW2** Microprocessor control.
KHTL - Includes low pressure switch.
FH-24 - mechanical control compatible.
FHT-24 - TW2 control compatible.
AQFH- mechanical control compatible.
AQFH-T - TW2 control compatible.

Standard Features:

- Fan coil units in 12 & 16,000 BTU/H (3,024 & 4,032 KCAL/H) sizes.
- Available in 115-1-50/60 input or 230-1-50/60 input models.
- Can be used with either cooling only or reverse cycle (heat/cool) systems.
- High capacity blade type fans are enclosed in a protective guard.
- Mounting flanges are pre-installed.
- Dual condensate drain outlets on the drain pan are factory connected into a ½" hose barb tee for ease of installation.
- Antifungal, antislosh foam media is installed in the internally corrosion resistant coated drain pan.
- All external condensate producing surfaces are covered with 1/8" thick foam insulation.
- Refrigerant line connections are 18" long. Flare fittings with flare nuts are provided.
- Designed for use with KH, FH or AQFH Series condensing units.
- Compatible with mechanical (AQS Series) or Electronic TW2 controls.
- Two year warranty when used with TW2 microprocessor control.

AQUA-AIR MANUFACTURING, division of the James D. Nall Co., Inc.
1050 East 9th Street, Hialeah, Florida 33010 U.S.A.
Ph. 305-884-8363 Fax 305-883-8549 Email sales@aquaair.com

Technical Specifications											
MODEL	Cooling Capacity BTU/H KCAL/H	Air Flow CFM m^3	Weight LBS KGS	Width IN MM	Depth IN MM	Height IN MM	Amp Draw 115v 230v	Power Watts	Flare Size: SUCTION LIQUID	Return Grill in^2 cm^2	Supply Grill in^2 cm^2
AQL - 12	12,000 3,025	400 679	19 42	18-3/4 476	8-3/4 222	10-1/2 267	.6 .3	69	3/8 1/4	120 775	120 775
AQL - 16	16,000 4,032	533 904					.9 .45	104	1/2 1/4		

Add 'C' to end of the model for a 230 volt unit. Example AQL-12C

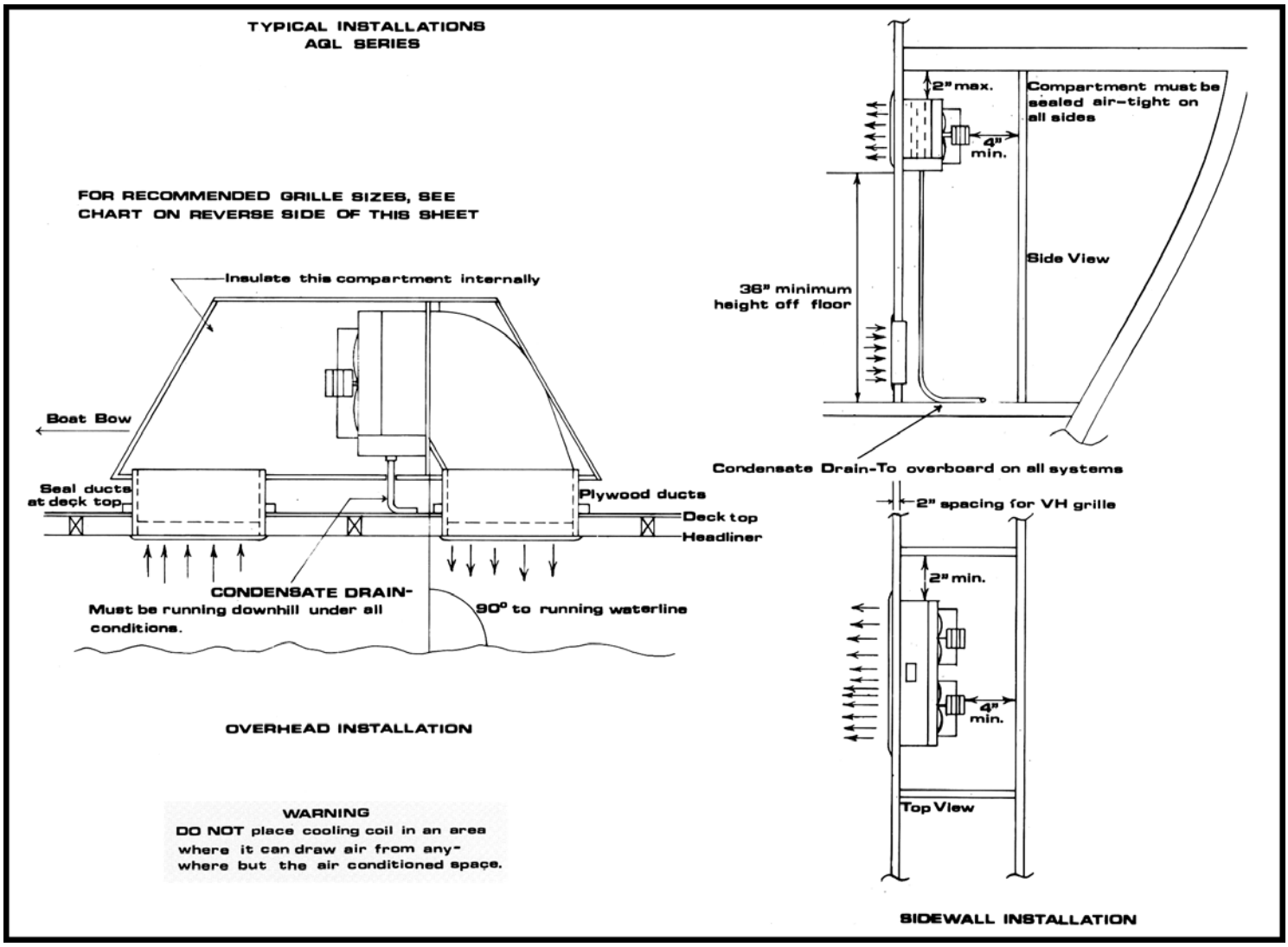

G:\DX Dealer Handbook\80040.wpd

AQUA AIR
MARINE AIR CONDITIONING SYSTEMS

FAN COIL - DRAW-THRU AQOC SERIES

Standard Features

- **< Fan coil units in 12-16,000 BTU/H (3,024-4,032 KCAL/H) sizes.**
- **< Available in 115-1-50/60 input or 230-1-50/60 input models.**
- **< Can be used with either cooling only or reverse cycle (heating/cooling) systems**
- **< Rotatable blower for ease of ducting**

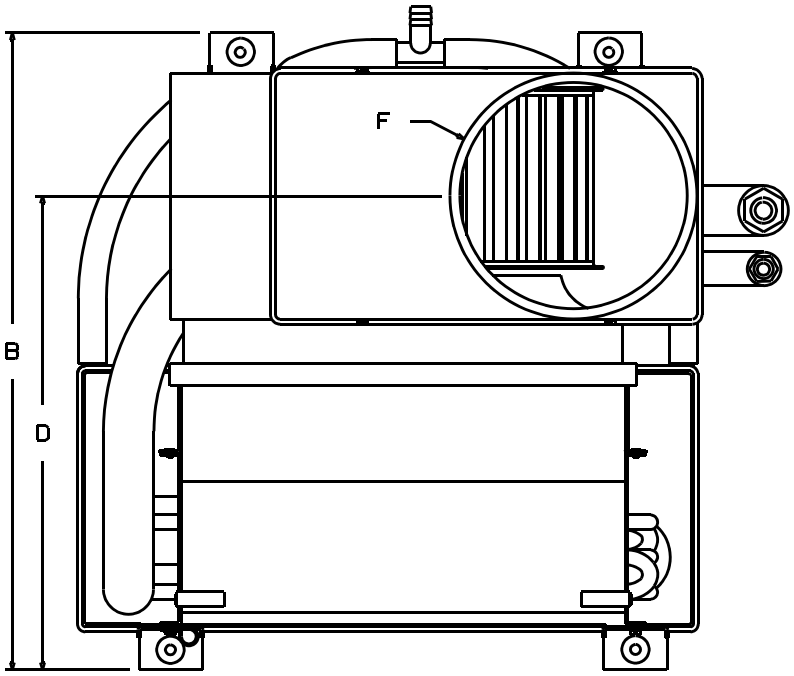

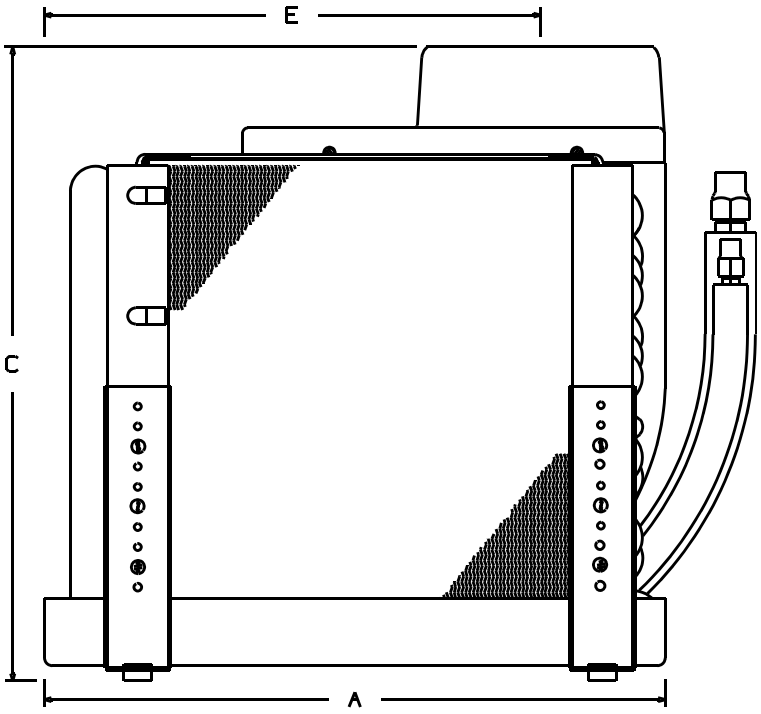

- **< High capacity squirrel cage blower is designed for quiet operation with flexible duct systems**
- **< Standard flexible duct connector is installed standard on the blower discharge. This connector also directly adapts to the Aqua-Air AT series adapter duct tees.**
- **< Dual condensate drain outlets on the drain pan are factory connected into a common ½" hose barb tee for ease of installation.**
- **< Antifungal, antislosh foam media is installed in the internally corrosion resistant coated drain pan.**
- **< All external condensate producing surfaces are covered with 1/8" thick foam insulation.**
- **< Vertically adjustable mounting legs with rubber vibration pads and mounting screws.**
- **< Refrigerant line connections are 18" long. Flare fittings with flare nuts are provided.**
- **< Removable lint screen installed on the front of the coil.**
- **< A plastic clamp is installed on the face of the unit for mounting the thermostat sensor.**
- **< Designed for use with either the K(H) Series or AQF(H) Series condensing units.**
- **< Can be used with either a three knob manual control (AQS1 or AQS3 Series) or the Tempwise 2001 digital thermostat.**
- **< Ideal for mounting low in the bottom of closets or under seats or bunks.**

Technical Specifications				
Model			**AQOC-12**	**AQOC-16**
Cooling Capacity		**BTU/H** **KCAL/H** **TONS**	12,000 3,024 1.00	16,000 4,032 1.33
Air Flow		**CFM** **m^3/HR**	400 679	533 904
Weight		**LBS.** **KGS.**	28 / 62	
Width	**A**	**IN / MM**	15-3/8" / 391	
Length	**B**	**IN / MM**	15-7/8" / 403	
Height	**C**	**IN / MM**	15-3/4" / 400	
Air Discharge Center Line	**D**	**IN / MM**	11-3/4" / 298	
	E	**IN / MM**	12-1/4" / 311	
Hose Adapter Diameter	**F**	**IN / MM**	6" / 152	
Amperage Draw		**115v**	2.7	4.0
		230v	1.4	2.0
Power		**Watts**	311	460
Minimum Return Air Grille Size		**IN^2** **CM^2**	120 775	144 930
Minimum Supply Air Grille Size		**IN^2** **CM^2**	60 387	72 465
Flare Connection Size		**Suction**	3/8"	1/2"
		Liquid	1/4"	1/4"

Add 'C' to the end of the model number for a 230 volt unit. Example: AQO-12C

I:\wordpfct\80050.wpd

AQUA-AIR MANUFACTURING, division of the James D. Nall Co., Inc.
1050 East 9th Street, Hialeah, Florida 33010 U.S.A.
Ph. 305-884-8363 Fax 305-883-8549 Email sales@aquaair.com

AQUA AIR
MARINE AIR CONDITIONING SYSTEMS

DIRECT EXPANSION FAN COIL AQOH

FEATURES

- ❏ High capacity squirrel cage blower is designed for quiet operation with flexible duct systems.
- ❏ Shaded pole motors for quiet operation on variable voltage fan controls
- ❏ Unit mounted terminal block for fan motor and water valve
- ❏ Refrigerant connections are located on the side of the unit in an accessible area
- ❏ Dual condensate outlets on the drain pan are factory connected into a common 1/2" hose barb tee for ease of installation.
- ❏ Vertically adjustable mounting legs with rubber vibration pads and mounting screws.
- ❏ All surfaces that might have condensate form on them are covered in 1/8" thick foam insulation.
- ❏ A charcoal foam anti-slosh media is placed inside the drain pan to prevent water from splashing out in high seas.
- ❏ Units available for 115/1/60, 100/1/50, 208-230/1/60 and 200-220/1/50 power inputs.

SPECIFICATIONS	AQOH-24 AQOH-24H	AQOH-36 AQOH-36H
COOLING CAPACITY	24,000 BTU/HR 6,048 KCAL/HR	36,000 BTU/HR 9,072 KCAL/HR
AIR FLOW CAPACITY	800 CFM 1359 M^3H	1200 CFM 2039 M^3H
WEIGHT	64 LBS 29 KGS	66 LBS 30 KGS
AMPERAGE DRAW	6.5 @ 115-1-60 3.2 @ 230-1-60	8.5 @ 115-1-60 4.3 @ 230-1-60
POWER CONSUMPTION	748 W	978 W
MINIMUM RETURN AIR GRILLE SIZE	200 in^2 1290 cm^2	288 in^2 1858 cm^2
MINIMUM SUPPLY AIR GRILLE SIZE	120 in^2 774 cm^2	160 in^2 1032 cm^2
REFRIGERANT LIQUID SIZE	3/8"	3/8"
REFRIGERANT SUCTION SIZE	1/2"	3/4"

ADD "C" TO THE END OF THE MODEL NUMBER FOR A 208-230/1/60 UNIT, "CK" FOR A 200-220/1/50 UNIT

80055-AQOH.WPD

AQUA-AIR MANUFACTURING, division of the James D. Nall Co., Inc.
1050 East 9th Street, Hialeah, Florida 33010 U.S.A.
Ph. 305-884-8363 Fax 305-883-8549 Email sales@aquaair.com

REAR VIEW

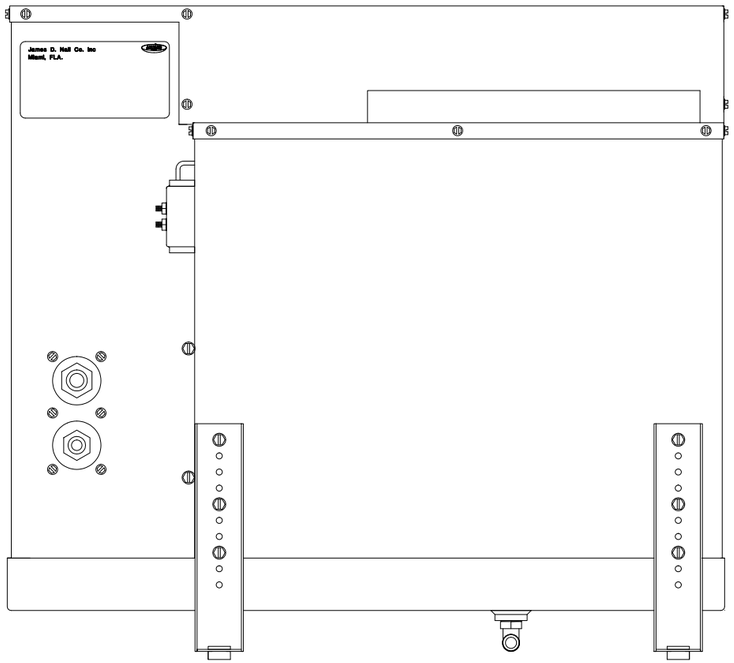

FRONT VIEW

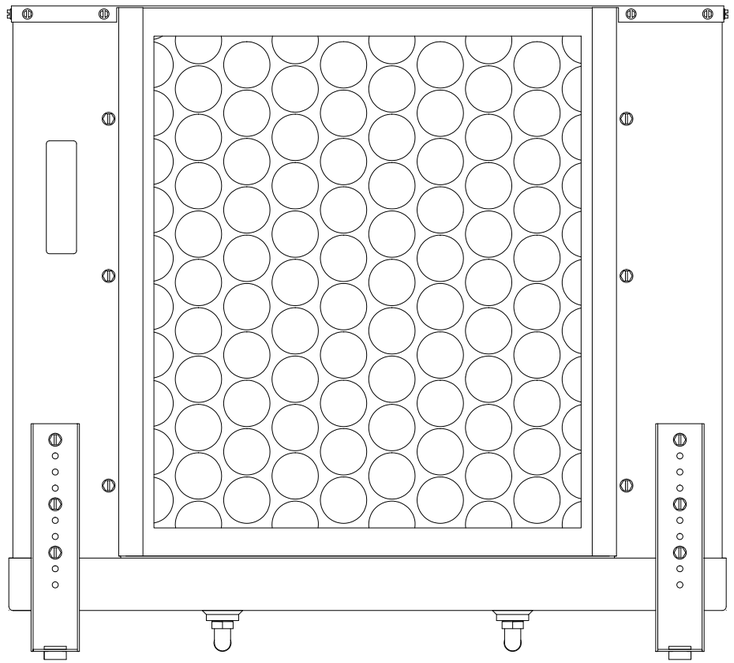

22.250"

RIGHT SIDE VIEW

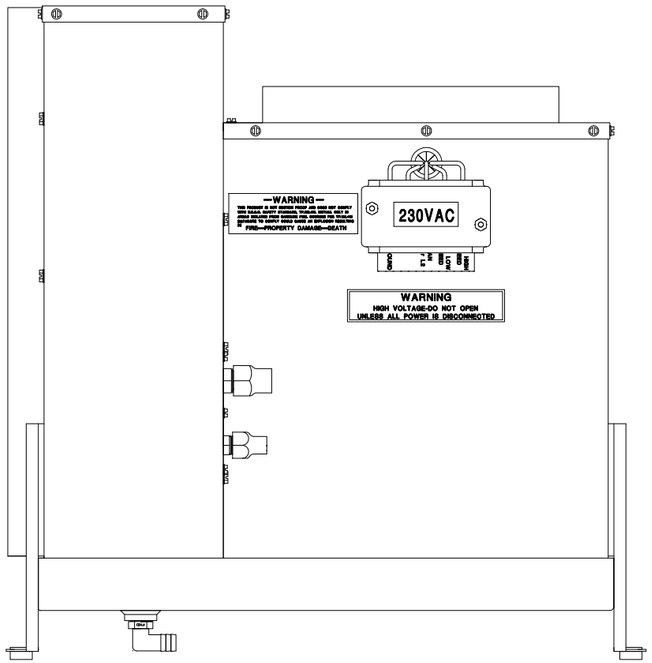

19.875"

0 2 4 6

SCALE - INCHES

0 50 100 150 200

SCALE - MILLIMETERS

TOP VIEW

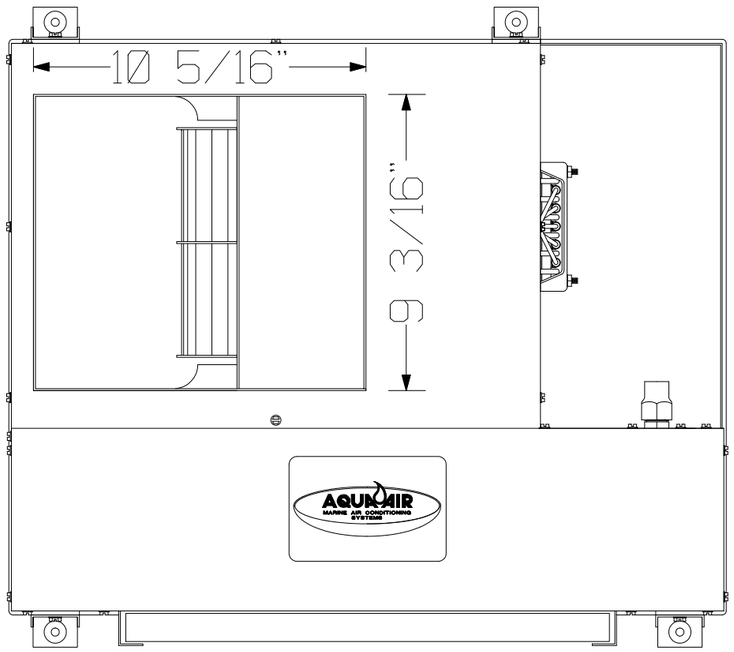

AQUA-AIR MARINE AIR CONDITIONING SYSTEMS

AQOH-20,24 DIRECT EXPANSION FAN COIL DIMENSIONS

DRAWING NUMBER	1011-20	DRAWN BY	DN	DATE	5-4-93
SCALE	FULL	APPROVED BY		REVISION DATE	REV A

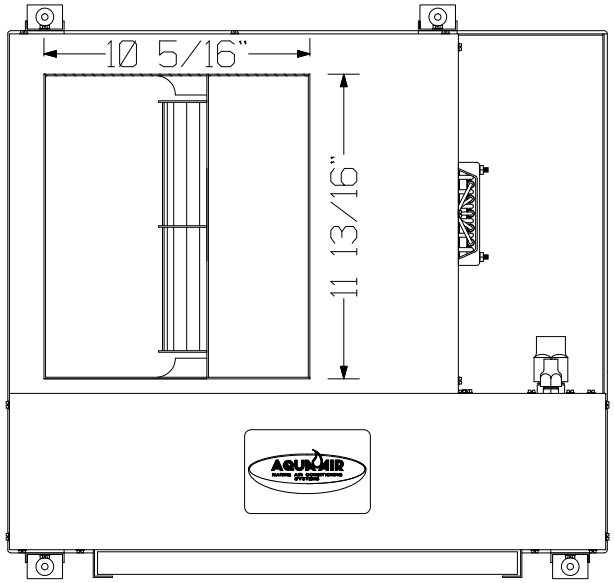

TOP VIEW

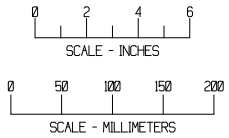

FRONT VIEW

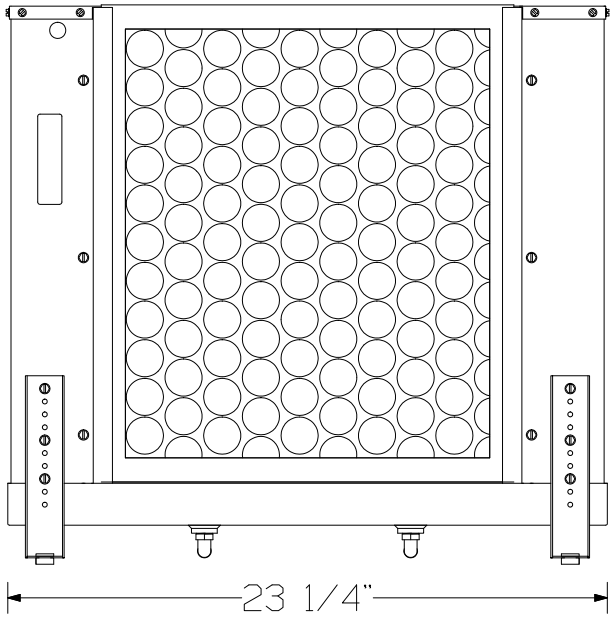

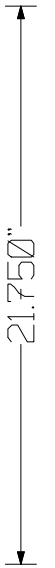

RIGHT VIEW

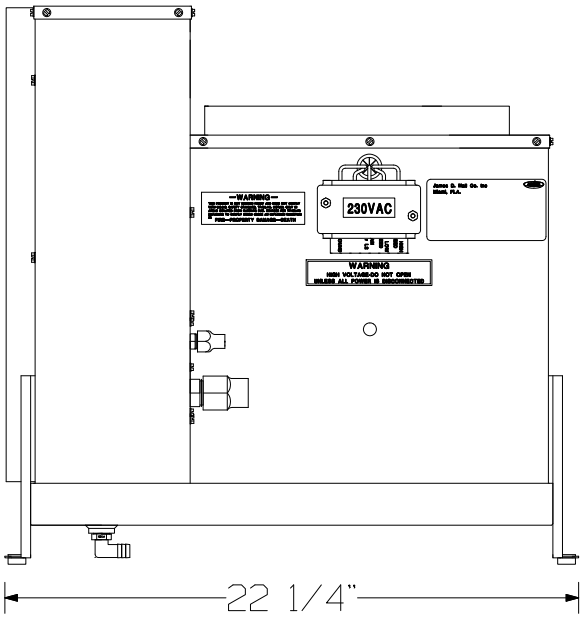

REAR VIEW

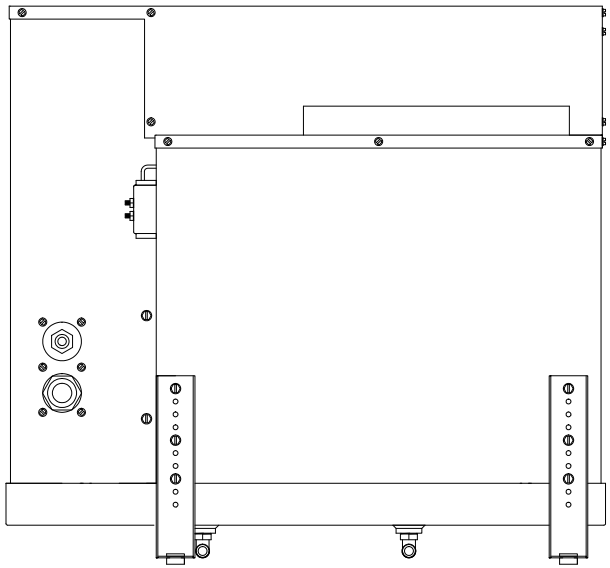

AQUA-AIR MARINE AIR CONDITIONING SYSTEMS

AQOH-30, 36 DIRECT EXPANSION FAN COIL
DIMENSIONAL DRAWING

DRAWING NUMBER	DRAWN BY	DATE
1010-35	DN	5-4-93

SCALE	APPROVED BY	REVISION DATE	REV
FULL			A

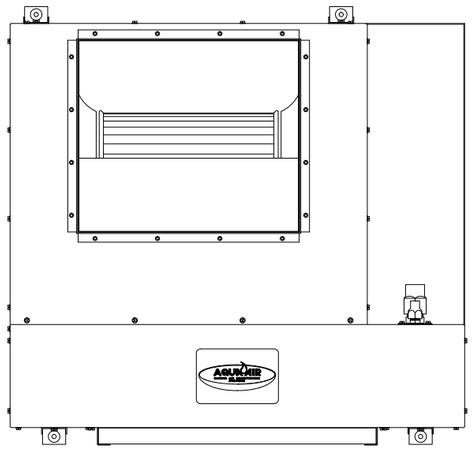

TOP VIEW

CAPACITY:	48,000 BTUH
CFM:	1600
HP:	1/3
SUCTION	3/4"
LIQUID:	1/2"

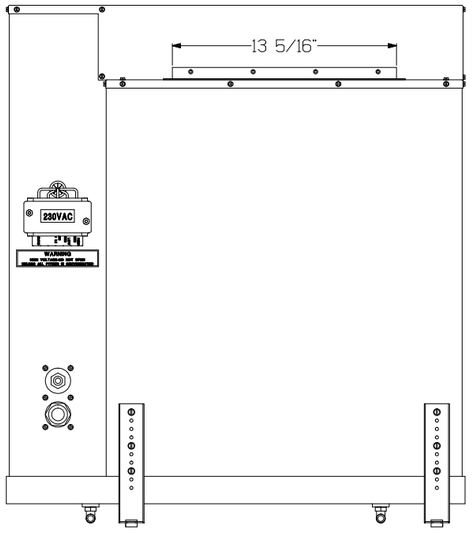

REAR VIEW

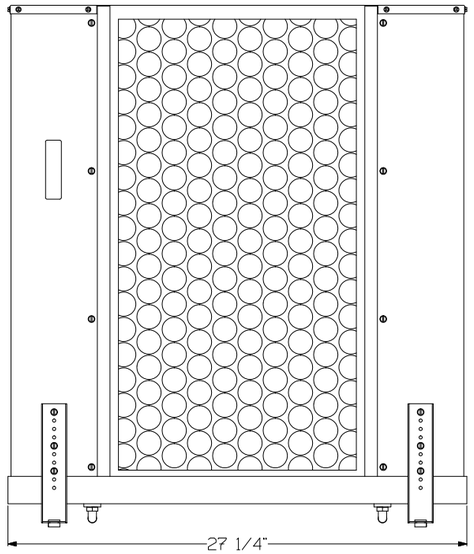

FRONT VIEW

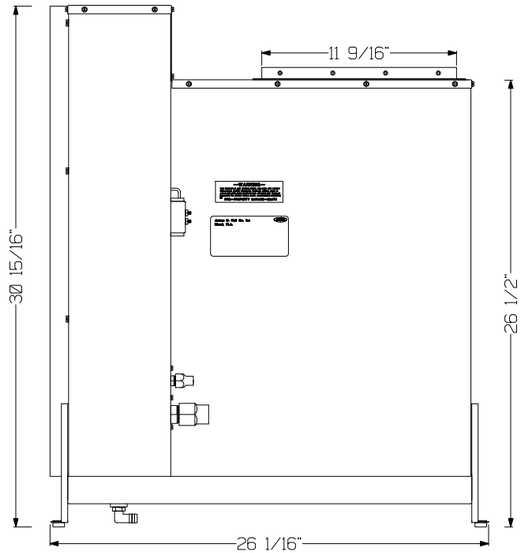

RIGHT VIEW

AQUA-AIR MARINE AIR CONDITIONING SYSTEMS

AQOH-48(C)(CK) EVAPORATOR UNIT
DIMENSIONS

DRAWING NUMBER 1016-47	DRAWN BY CP	DATE 03-05-98	
SCALE	APPROVED BY	REVISION DATE	REV A

AQUA AIR
MARINE AIR CONDITIONING SYSTEMS

CONDENSING UNITS KHG SERIES

The redesigned KHG Series Condensing Units have the smallest footprint available in the industry. These rugged, highly efficient, reverse cycle units have an integrated drain pan and a removable electric box that can be mounted up to 6' away. With below deck space at a premium in the modern yacht, there is a recognizable size benefit in the KHG Model which is 32% smaller than the competition. These versatile models can fit snug spaces or can be racked to maximize vertical space, while at the same time presenting more options in cabin space zone temperature control than ever before. These units can be matched to a host of Cooling/Heating units available from Aqua-Air.

KHG-05, 07, 10, 12 and 16

KHG Series Models	
KHG	For use with AQS Series 3 Knob Thermostats
KHLG	KHG with additional Low Refrigerant Pressure Switch
KHSG	KHG with integral TSV Digital Thermostat PC Board
KHSLG	KHSG with additional Low Refrigerant Pressure Switch

Standard Features

- **Smallest footprint available.**
- **Reverse cycle condensing units in 5-16,000 BTU/H sizes (1,260-4,032 KCAL/H).**
- **Available in 115-1-50/60 input or 230-1-50/60 input models.**
- **Dependable reciprocating compressor.**
- **Seawater condenser constructed of copper outer jacket & 90-10 cupronickel inner tube for corrosion resistance.**
- **Suction line accumulator for low load compressor protection.**
- **Electric box contains the start & run capacitors and start relay.**
- **Electric box can be remote mounted up to 6' (2m) away.**
- **Two sets of rubber isolation mounts for vibration free operation.**
- **Aluminum drain pan to catch any condensate formed on the unit.**
- **Plywood mounting base for ease of installation.**
- **Base valves with Nylon stem caps and brass caps over the charging & access ports.**
- **Ignition protected construction for use on gasoline powered vessels.**
- **Can be used in environments up to 140˚ F (60˚ C).**
- **White enamel finish.**
- **Designed for use with R-407C environmentally friendly refrigerant**

Technical Specifications

Model		KH**- 05		KH**- 07		KH**-10		KH**-12		KH**-16	
Capacity	*BTU/H* *KCAL/H*	5,000 1,260		7,000 1,764		10,000 2,520		12,000 3,024		16,000 4,032	
Length	*in/mm*	13" / 330mm									
Width	*in/mm*	12" / 305mm									
Height *in/mm* *with electrical box* *without electrical box*		16-3/8" / 416mm 13-5/16" / 338mm									
Weight	*Lbs* *Kgs*	46 21		53 24		64 29		66 30		67 30	
Voltage		115	230	115	230	115	230	115	230	115	230
Amps		5.3	N/A	6.6	3.4	8.6	4.4	9.1	4.9	11.4	5.3
Watts		600		730		940		1050		1150	
Suction Service Valve Connection		3/8" male 45˚ flare								½" male 45˚ flare	
Discharge Service Valve Connection		1/4" male 45˚ flare									
Seawater Connections, Inlet and Outlet	*in/mm*	5/8" / 16mm OD									
Drain connection	*in/mm*	½" / 13mm OD									

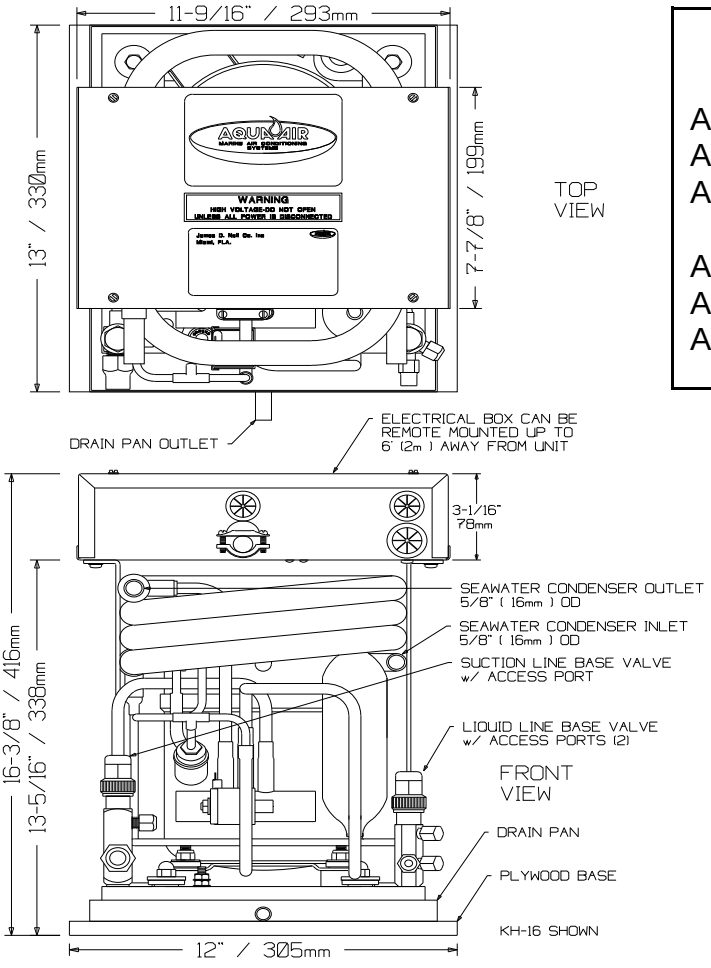

Matching Heating and Cooling Units

AQO - Draw-Thru ductable type
AQOC - Compact Draw Thru Ductable type
AQC - Compact Draw-Thru Ductable with Vertical Discharge
AQB - Compact Blow-Thru type
AQL - Low Profile Compact Blow-Thru type
AQB2/AQE - Twin Blower / Low Profile type

80076-01.wpd

Aqua-Air Manufacturing
James D. Nall Co., Inc.
1050 East 9th Street,
Hialeah, Florida 33010 U.S.A.
Ph. 305-884-8363 Fax 305-883-8549
sales@aquaair.com
www.aquaair.com

AQUA AIR
MARINE AIR CONDITIONING SYSTEMS

CONDENSING UNITS FHSG-20, 24 SERIES

Models

FHG Series **Condensing unit for use with a remote AQS3 Series Thermostat**
FHSG Series **Condensing unit for use with a remote Sapphire Digital Display. The Sapphire P.C. board is installed in the condensing unit electrical box.**

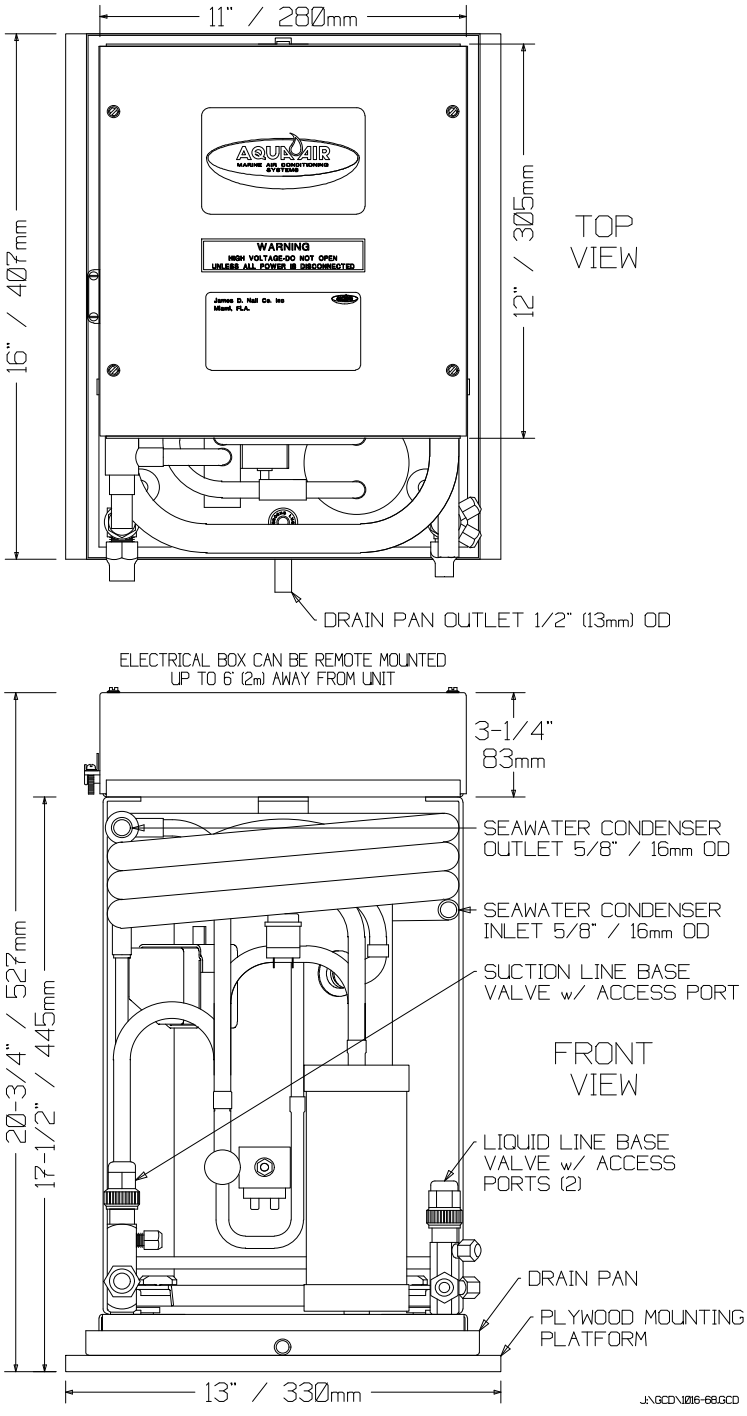

Standard Features

- Reverse cycle condensing unit
- Available in 208-230/1/60, 208/3/60, and 460/3/60 input models.
- Dependable and quiet Scroll compressor
- Seawater condenser constructed of copper outer jacket & 90-10 cupronickel inner tube for corrosion resistance
- Suction line accumulator for low load compressor protection
- Smaller footprint than previously available - 20% smaller than the competition
- Electric box contains the start & run capacitors, start relay and contactors.
- Electric box can be remote mounted up to 6' (2m) away from the unit.
- High refrigerant pressure, automatic reset switch
- Low refrigerant pressure, automatic reset switch
- Two sets of rubber isolation mounts for vibration free operation
- Aluminum drain pan to catch any condensate formed on the unit
- Plywood mounting base for ease of installation
- Base valves with Nylon stem caps and brass caps over the charging & access ports
- Can be used in environments up to 140˚ F (60˚ C)
- White enamel finish
- R-407C Refrigerant

Technical Specifications				
Model	**FH*G- 20C**	**FH*G- 24C**	**FH*G- 24D**	**FH*G-24E**
Capacity BTU/H	20,000	24,000		
KCAL/H	5,040	6,048		
Length in/mm	16" / 407mm			
Width in/mm	13" / 330mm			
Height in/mm				
with electrical box	20-3/4" / 527mm			
without electrical box	17-1/2" / 445mm			
Weight Lbs	123			
Kgs	56			
Voltage / Phase / Frequency	208-230/1/60	208-230/1/60	208/3/60	460/3/60
Amps	7.7	9.3	4.9	2.5
Watts	1680	2346	1360	1360
Suction Service Valve Connection	1/2" male 45° flare			
Discharge Service Valve Connection	3/8" male 45° flare			
Seawater Connections, Inlet and Outlet in/mm	5/8" / 16mm OD			
Drain connection in/mm	½" / 13mm OD			

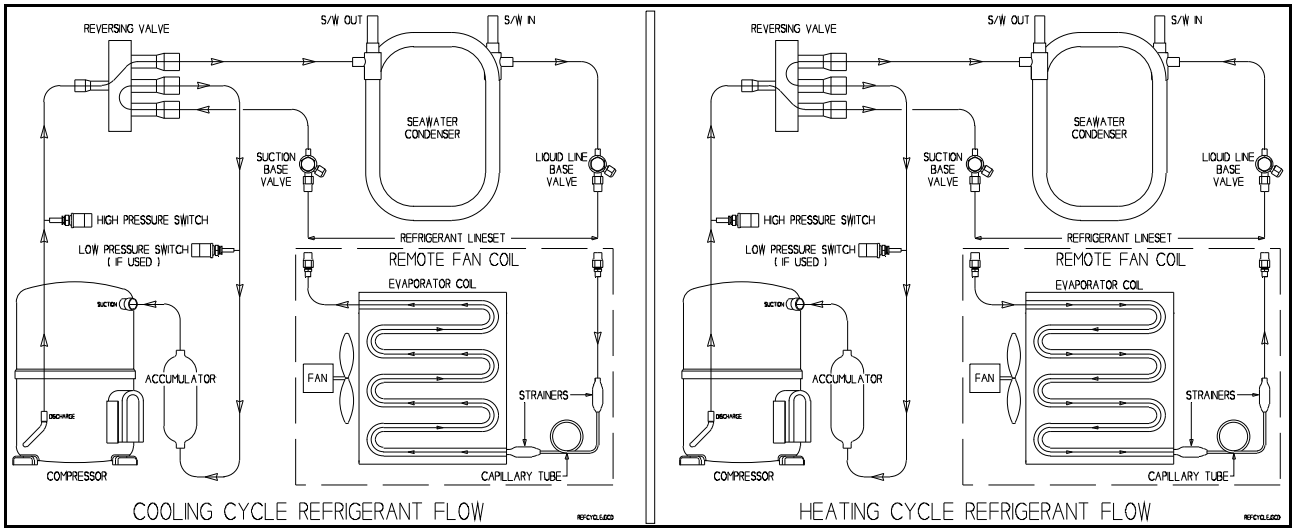

I:\wordpfct\80072-SG.wpd

AQUA-AIR MANUFACTURING, division of the James D. Nall Co., Inc.
1050 East 9th Street, Hialeah, Florida 33010 U.S.A.
Ph. 305-884-8363 Fax 305-883-8549 Email sales@aquaair.com

AQUA AIR
MARINE AIR CONDITIONING SYSTEMS

CONDENSING UNITS **ADX SERIES**

Standard Features

- Cooling only or Reverse cycle Condensing Unit
- Available in 208-230/1/60 (3-5 ton), 208-230/3/60, and 460/3/60 input models.
- Available in 200-220/1/50 (3-5 ton) and 380-415/3/50 input models
- Dependable and quiet Copeland Scroll compressor
- Seawater condenser constructed of copper outer jacket & 90-10 cupronickel inner tube for corrosion resistance
- Available for use with Mechanical and Digital Thermostats
- Suction line accumulator for low load compressor protection
- Electric box contains the start & run capacitors, start relay and contactors for all single phase input models. Three phase units include contactors
- Electric box can be remote mounted up to 6' (2m) away from the unit.
- High refrigerant pressure, automatic reset switch
- Low refrigerant pressure, automatic reset switch
- Compressor is vibration mounted for quiet operation
- Stainless steel drain pan to catch any condensate formed on the unit
- Base valves with Nylon stem caps and brass caps over the charging & access ports
- Can be used in environments up to 140˚ F (60˚ C)
- White enamel finish
- R-407C Refrigerant

A	5	DX	H	S	G	C	Model Number Nomenclature		
							C	208-230/1/60	
							CK	200-220/1/50	
							D	208-230/3/60	Input Power
							E	440-460/3/60	
							EK	380-415/3/50	
							G	R-407C	Refrigerant
							Z	AQS3 Three Knob Mechanical Thermostat	
							S	TSV Sapphire Digital Thermostat	
							T	TW2 Tempwise Digital Thermostat	
							Blank	Cooling Only	
							H	Reverse Cycle (Cooling/Heating)	
							DX	Direct Expansion Condensing Unit	
							Tons	Rated Capacity @ Input Power (3-6)	
							A	Alpha Series Condensing Unit	

Technical Specifications					
Model		**A3DX**	**A4DX**	**A5DX**	**A6DX**
Capacity	***BTU/HR*** ***KCAL/HR***	**36,000** **9,000**	**48,000** **12,000**	**60,000** **15,000**	**72,000** **18,000**
Length	***inches / mm***	**24" / 610mm**			
Width	***inches / mm***	**12" / 305mm**			
Height	***inches / mm***	**18" / 457mm**			
Weight	***Lbs / Kgs***	**138 / 63**	**139 / 64**	**143 / 65**	**147 / 67**
Suction Line Service Valve Connection		**3/4" male** **45˚ flare**	**7/8" ODS** **Solder Connection**		
Liquid Line Service Valve Connection		**1/2" male** **45˚ flare**			
Seawater Connection	***inches / mm***	**1" / 25mm OD**			
Drain	***inches / mm***	**½" / 13mm OD**			

Performance Specifications									
MODEL	**CAPACITY**			**POWER SUPPLY**			**FULL LOAD AMPS FLA**	**POWER INPUT W**	**LOCKED ROTOR AMPS LRA**
	BTU/HR	**KCAL/HR**	**TONS**	**VOLTAGE**	**PHASE**	**Hz**			
A3DXxxGC	36,000	9,000	3.0	208-230	1	60	10.6	2255	88
A3DXxxGD	36,000	9,000	3.0	208-230	3	60	7.6	2210	77
	30,000	7,500	2.5	200-220	3	50	7.5	1834	76
A3DXxxGE	36,000	9,000	3.0	460	3	60	3.8	2210	39
	30,000	7,500	2.5	380-415	3	50	3.7	1834	38
A3DXxxGEK	36,000	9,000	3.0	380-415	3	50	4.6	2450	44
A4DXxxGC	48,000	12,000	4.0	208-230	1	60	14.4	3055	129
A4DXxxGCK	48,000	12,000	4.0	200-220	1	50	15.1	3125	140
A4DXxxGD	48,000	12,000	4.0	208-230	3	60	9.3	3005	120
	40,000	10,000	3.3	200-220	3	50	9.2	2450	88
A4DXxxGE	48,000	12,000	4.0	460	3	60	4.7	3005	60
	40,000	10,000	3.3	380-415	3	50	4.6	2450	44
A4DXxxGEK	48,000	12,000	4.0	380-415	3	50	5.7	3005	58
A5DXxxGC	60,000	15,000	5.0	208-230	1	60	18.2	3765	169
A5DXxxGD	60,000	15,000	5.0	208-230	3	60	11.6	3655	137
	50,000	12,500	4.0	200-220	3	50	11.4	3005	115
A5DXxxGE	60,000	15,000	5.0	460	3	60	5.8	3765	85
	50,000	12,500	4.0	380-415	3	50	5.7	3005	58
A5DXxxGEK	60,000	15,000	5.0	380-415	3	50	7.4	3615	43
A6DXxxGD	72,000	18,000	6.0	208-230	3	60	13.2	4220	156
	60,000	14,000	4.7	200-220	3	50	13	3490	172
A6DXxxGE	72,000	18,000	6.0	460	3	60	6.6	4220	75
	60,000	14,000	4.7	380-415	3	50	6.5	3490	74

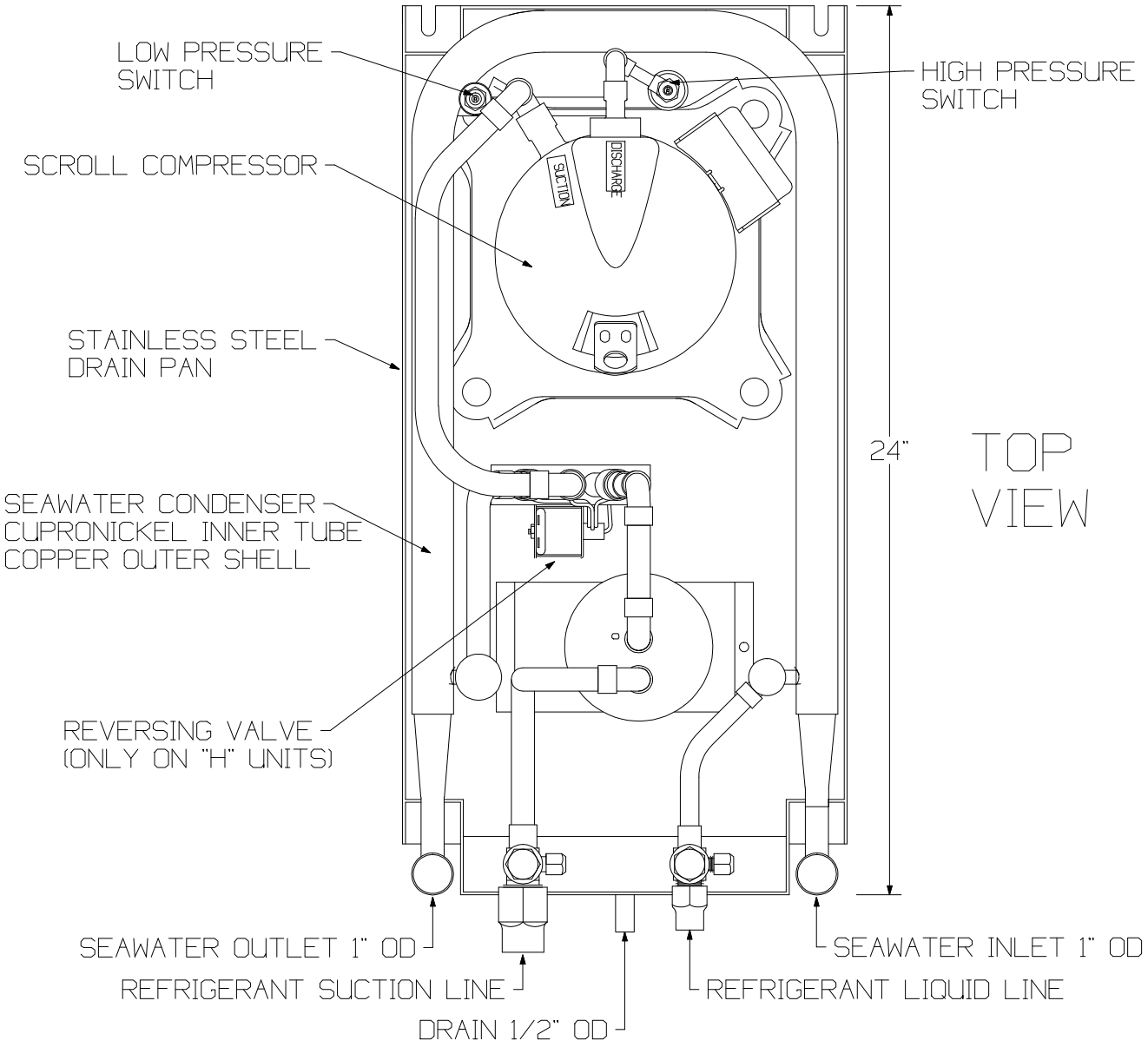

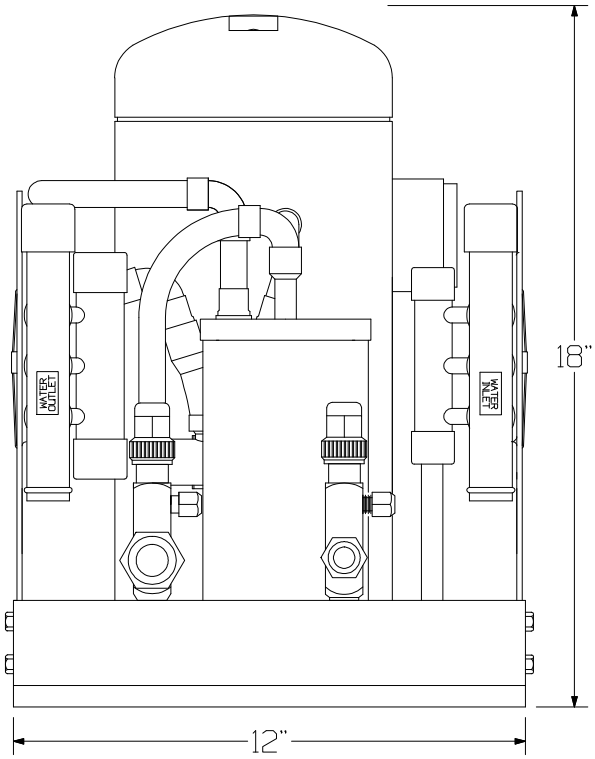

REVERSE CYCLE UNIT

FRONT VIEW

A3DXHGC SHOWN

1017-18.GXD

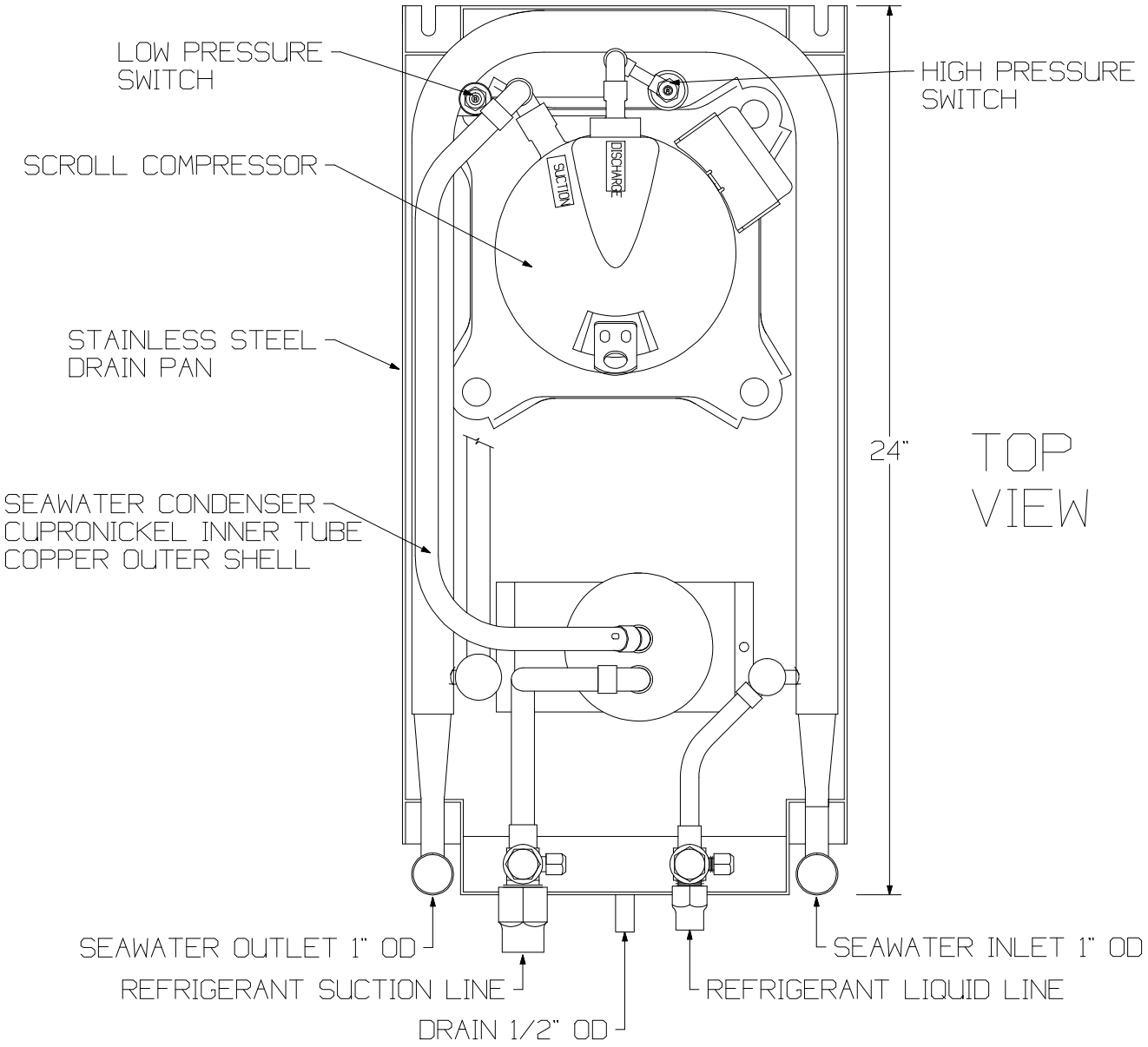

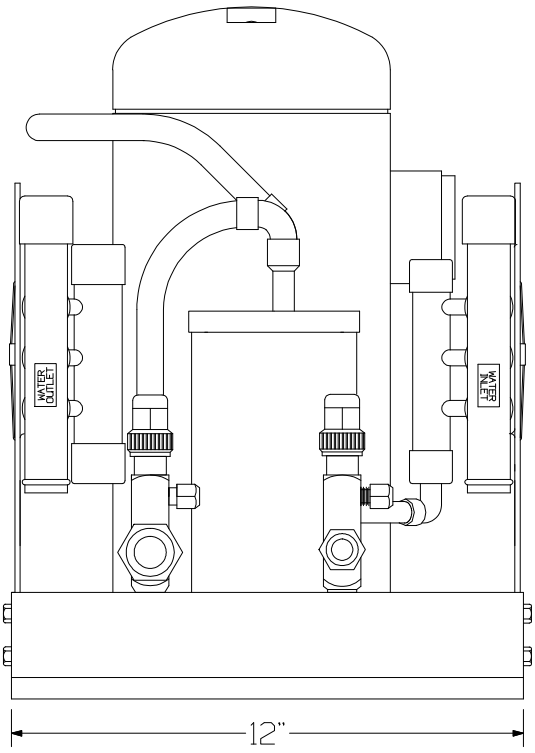

COOL ONLY UNIT

FRONT VIEW

A3DXGC SHOWN

1017-18.GXD

REMOTE SYSTEM

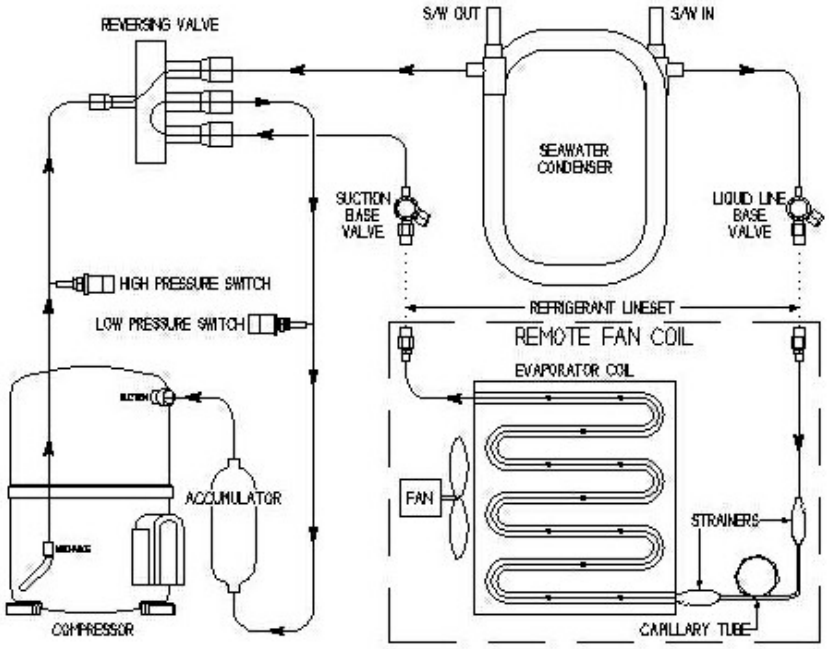

COOLING CYCLE REFRIGERANT FLOW

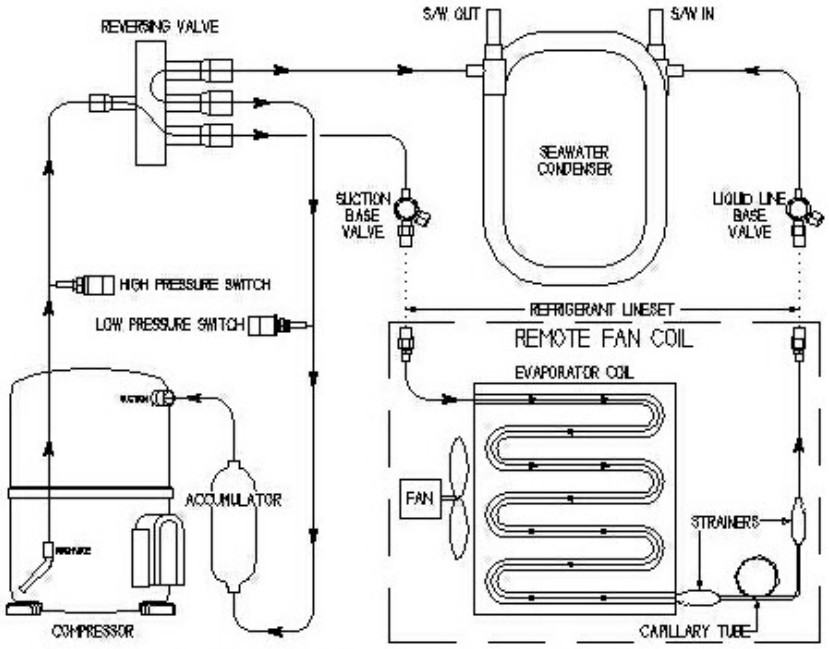

HEATING CYCLE REFRIGERANT FLOW

AQUA-AIR MANUFACTURING, division of the James D. Nall Co., Inc.
1050 East 9th Street, Hialeah, Florida 33010 U.S.A.
Ph. 305-884-8363 Fax 305-883-8549 Email sales@aquaair.com
www.aquaair.com

AQUA AIR
MARINE AIR CONDITIONING SYSTEMS

SEAWATER PUMPS AQPM Series

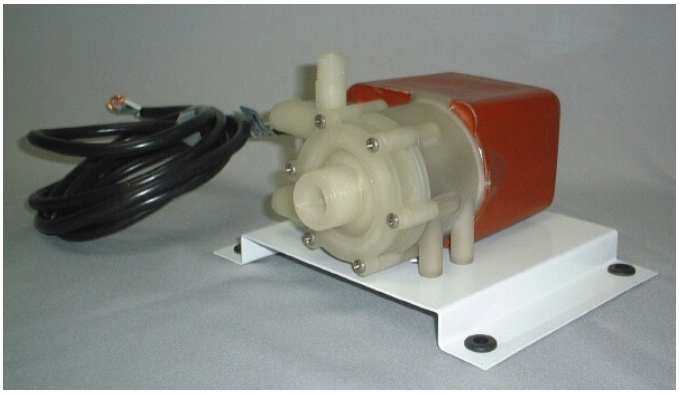

AQPM-02

AQPM-10

AQPM-05

TECHNICAL SPECIFICATIONS

PUMP MODEL	GPH @ FEET OF HEAD	VOLTAGE	PH	HZ	AMPS	WATTS	WEIGHT LBS / KGS	INLET SIZE	OUTLET SIZE	LENGTH IN/MM	WIDTH IN/MM	HEIGHT IN/MM
AQPM-02	250 @ 3'	115	1	50/60	1.0	104	7 / 3.2	3/4" MPT	1/4" MPT	6" 152	5" 127	5" 127
AQPM-02C	250 @ 3'	230		50/60	0.5							
AQPM-05	490 @ 3'	115		50/60	2.0	230	10 / 4.5	3/4" FPT	1/2" MPT	7.25" 184	5" 127	5.25" 133
AQPM-05C	490 @ 3'	230		60	1.0							
AQPM-05CK	400 @ 3'	220		50	1.0							
AQPM-10	985 @ 3'	115		50/60	2.2	242	10 / 4.5	1" FPT	1/2" MPT	9" 229	4.50" 114	6.13" 156
AQPM-10C	985 @ 3'	230		50/60	1.2							

I:\wordpfct\80080-00.wpd

AQUA-AIR MANUFACTURING, division of the James D. Nall Co., Inc.
1050 East 9th Street, Hialeah, Florida 33010 U.S.A.
Ph. 305-884-8363 Fax 305-883-8549 Email sales@aquaair.com

AQUA AIR
MARINE AIR CONDITIONING SYSTEMS

SEAWATER PUMPS AQPM-15,30 Series

Standard Features

- Large capacity centrifugal type for extended, quiet operation
- Wetted components constructed of high quality non-corrosive materials,
- Built in thermal overload protection
- AC motors are Ignition protected
- Threaded intake and discharge ports are U.S. standard taper pipe thread (NPT)

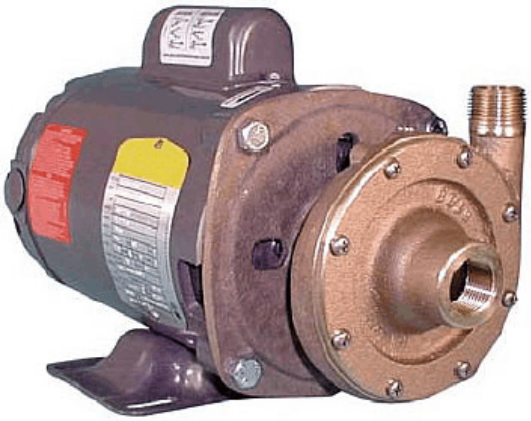

AQPM-15

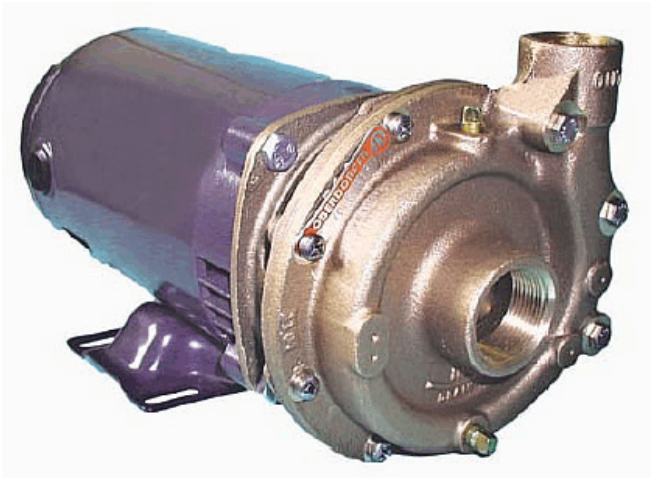

AQPM-30

TECHNICAL SPECIFICATIONS				
	AQPM-15	AQPM-15L	AQPM-30	AQPM-30L
VOLTAGE	115 / 230			
PHASE	1			
HZ.*	50 / 60	60	50 / 60	60
AMPS	10.0 / 5.0	8.6 / 4.3	10.0 / 5.0	
WATTS	737		944	
WEIGHT	28 LBS		32 LBS	
INLET SIZE	3/4" FPT		1-1/4" FPT	
OUTLET SIZE	3/4" MPT		1" FPT	
LENGTH	12-1/4"			
WIDTH	6-1/2"			
HEIGHT	6-5/8"			
MOTOR HP	1/3		1/2	

Pumps operated on 50 Hz will experience a 17% decrease in flow rate and a 31% decrease in total head

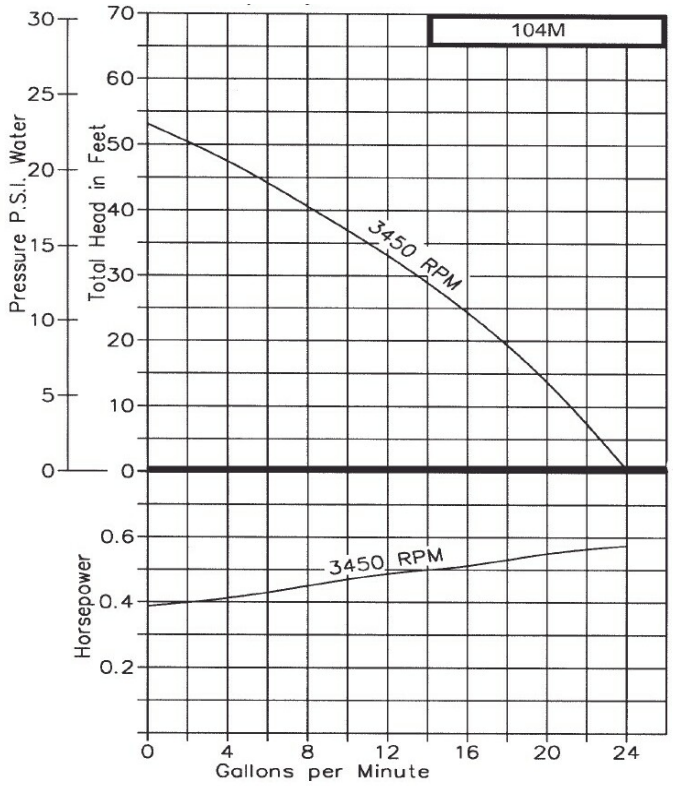

AQPM-15
Pump Curve

AQPM-30
Pump Curve

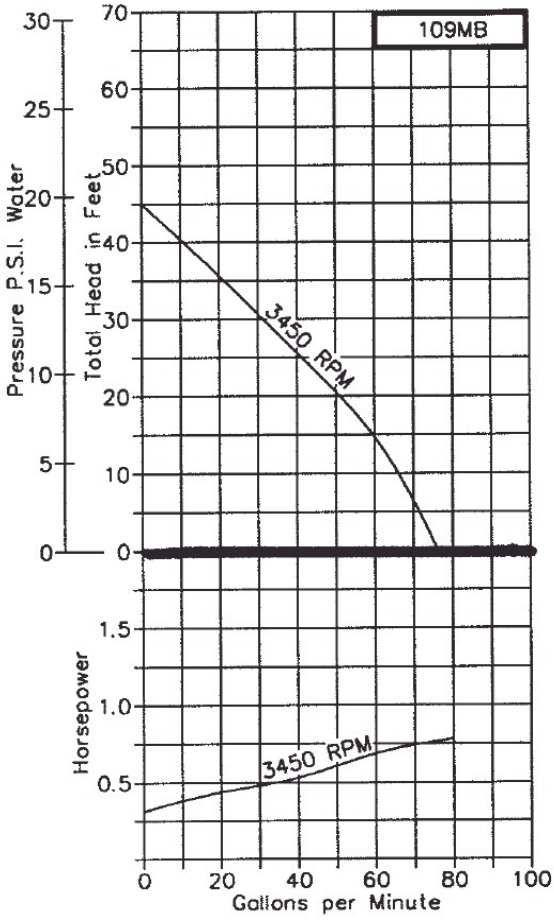

Aqua-Air Manufacturing, division of the James D. Nall Co., Inc.
1050 East 9th Street, Hialeah, Florida 33010 U.S.A.
Ph. 800-328-1043 305-884-8363 Fax 305-883-8549
www.aquaair.com sales@aquaair.com

AQUA AIR
MARINE AIR CONDITIONING SYSTEMS

PUMP RELAYS *AQPR Series*

AQP6R Shown

Pump relays are used when more than one self contained, condensing or chiller units are supported by a single seawater pump. One triggering circuit is needed for each unit to be supplied by the pump.

The AQP2R pump relay utilizes an open type relay to provide power to the pump from two individual units. The AQP6R is a solid state relay, capable of accepting up to six different inputs to pre-installed trigger circuits. The solid state AQP8R, which can support up to eight systems, utilizes separate triggers (PEC's) that can be ordered and installed in differing voltages.

The AQP6RC, D & E are used when the amperage of the pump to be controlled exceeds the amperage carrying capacity of the controller you are using or when controlling 3 phase pumps. Each will accept as many as 6 triggering inputs in either 100-120/1/50-60 or 200-240/1/50-60 power ranges.

Technical Specifications

PUMP RELAY MODEL	MAX RATED AMPS	CONTROL VOLTAGE	PHASE	PUMP VOLTAGE	HEIGHT in / mm	WIDTH in / mm	DEPTH in / mm	IGNITION PROTECTED
AQP2R	10	115	1	115	4 / 101	9-1/2 / 241	5-1/2 / 140	N
AQP2RC	10	230	1	230	4 / 101	9-1/2 / 241	5-1/2 / 140	N
AQP6R	10	115 - 230	1	115 - 230	2-1/4 / 57	7-1/8 / 181	6-13/16 / 173	Y
AQP6RC	20	115 - 230	1	200 - 240	5-9/16 / 142	10-7/16 / 265	6-1/8 / 156	N
AQP6RD	30	115 - 230	3	200 - 240	5-9/16 / 142	10-7/16 / 265	6-1/8 / 156	N
AQP6RE	30	115 - 230	3	380 - 460	5-9/16 / 142	10-7/16 / 265	6-1/8 / 156	N
AQP8R	10	*	1	115 - 230	5-1/2 / 140	10-1/2 / 266	6 / 152	Y

Note: AQP2R and AQP2RC come with 2 pre-installed triggers. AQP6R, AQP6RC,AQP6RD and AQP6RE come with 6 pre-installed triggers.

***** Control Triggers (PEC-115, PEC-230) are ordered separately depending on the application

W:\DX Dealer Handbook\80085.wpd

AQUA-AIR MANUFACTURING, division of the James D. Nall Co., Inc.
1050 East 9th Street, Hialeah, Florida 33010 U.S.A.
Ph. 305-884-8363 Fax 305-883-8549 E-mail sales@aquaair.com

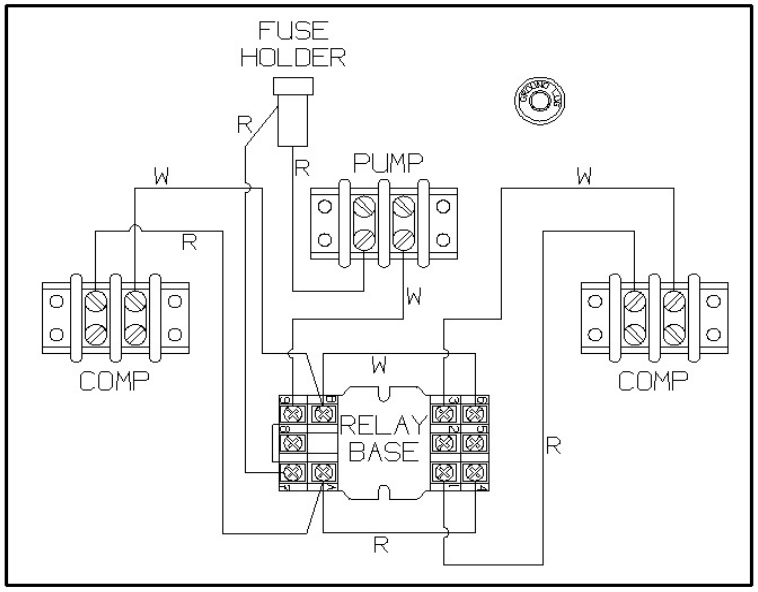

AQP2R (C)

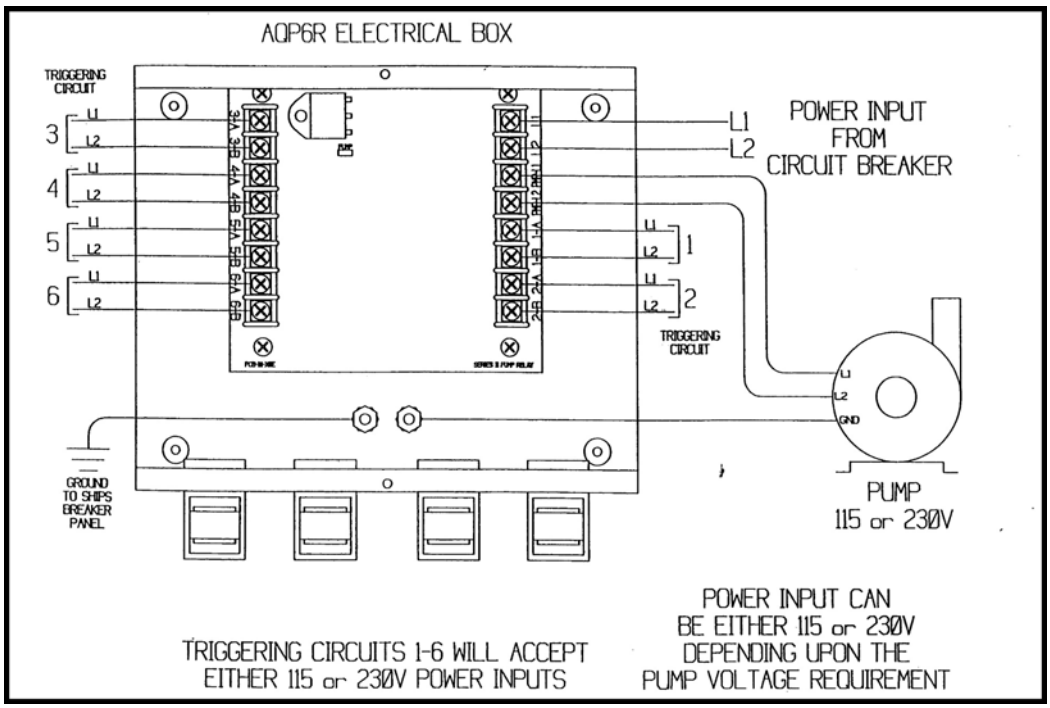

AQP6R

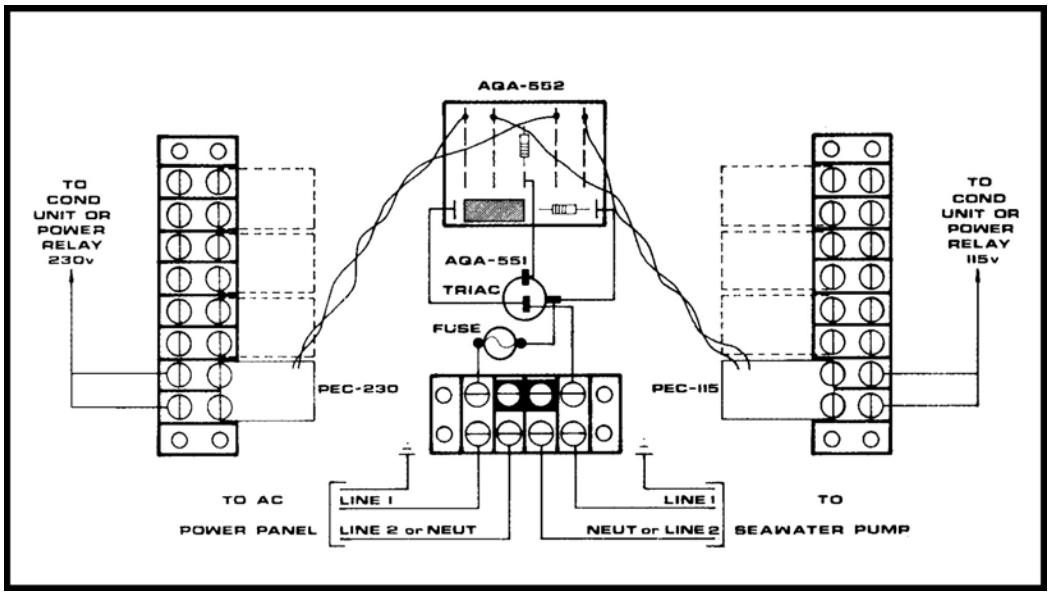

AQP8R

AQUA-AIR
MARINE AIR CONDITIONING SYSTEMS

THERMOSTAT **AQS SERIES**

The Aqua-Air AQS Series of three knob electro mechanical switch assemblies provide for control over all electrical components in a direct expansion split or self contained system. The OFF-FAN-RUN switch controls the system mode of operation, the FAN switch controls the speed of the fan motor and the THERMOSTAT controls when the compressor and reversing valve cycle on and off based upon the room temperature.

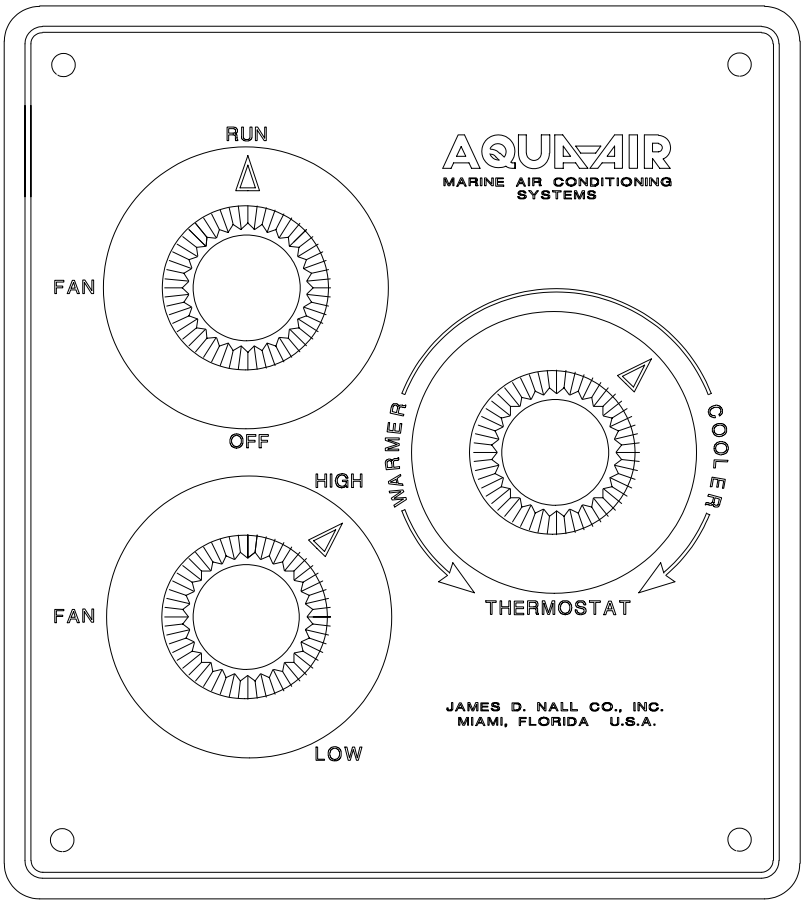

Standard Features

- **Available in Brown (N) or Black (B) faceplates & knobs**
- **Available in cooling only (AQS1 series) or reverse cycle (AQS3 series) models**
- **Available in 115v or 230v**
- **10' (3m) capillary tube temperature sensor**
- **Color coded terminal strip with a 3' (1m) wire harness for split systems**
- **Quick disconnect plug for self contained units with a 10' (3m) wiring harness**
- **Variable speed (Z) or 2 speed (B) fan control**
- **Supplied with plastic covers for both the back of the control and the terminal strip (if used)**

AQS SERIES THERMOSTATS						
MODEL	COOLING SYSTEM	COOLING / HEATING SYSTEM	USE CONTROL WITH UNITS			CONNECTION TYPE
			K(H), K(H)L	AQF(H)	SMR(S)	
AQS1-ZB, ZN	x		x	x		TERMINAL STRIP
AQS1-ZBP, ZNP	x				x	PLUG
AQS3-ZB, ZN		x	x	x		TERMINAL STRIP
AQS3-ZBP, ZNP		x			x	PLUG

For 230v units add a 'C' to the end of the model number Example: AQS3-ZBC

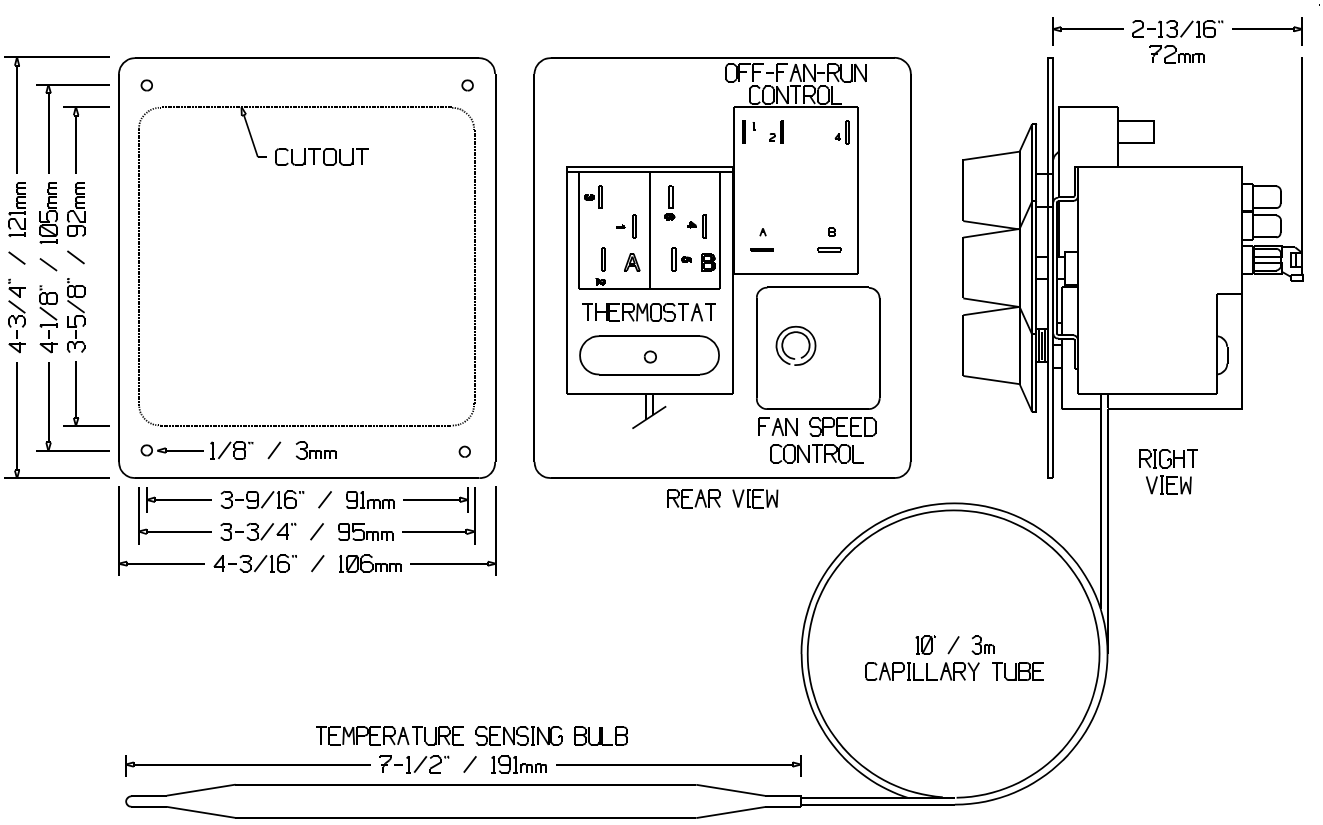

Typical Wiring Schematic for AQS3-ZB or ZN Thermostat

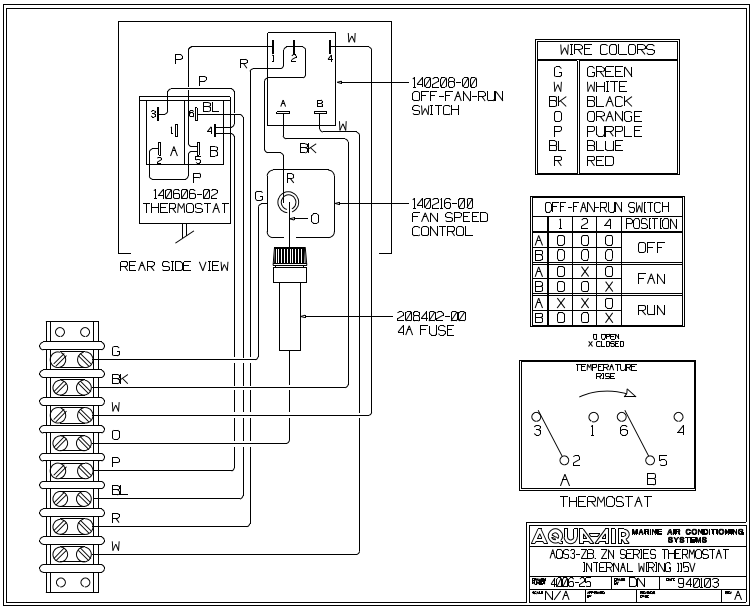

AQS3-ZBPC Thermostat Nomenclature

Voltage	blank	115v
	C	230v
Connection	blank	Terminal
	P	Plug
Color	B	Black
	N	Brown
Fan Speed Control	B	2 Speed
	Z	Variable
Type	1	Cooling
	3	Heat/Cool

I:\wordpfct\80095.wpd

AQUA-AIR MANUFACTURING, division of the James D. Nall Co., Inc.
1050 East 9th Street, Hialeah, Florida 33010 U.S.A.
Ph. 305-884-8363 Fax 305-883-8549 Email sales@aquaair.com

AQUA-AIR
MARINE AIR CONDITIONING SYSTEMS

TW2 SERIES DX SYSTEMS CONTROLS

The TW2 is a microprocessor-based electronic control designed for use with AQUA-AIR direct expansion and chilled water marine air conditioning systems. TW2 is the evolution of digital electronic control in the marine industry, the culmination of years of advancements in both functions and reliability. The feature package includes both manual and programmable operations that make your marine air conditioning system work with hands-off efficiency, while at the same time monitoring its operating parameters for protection of expensive equipment. So whether you want "set it and forget it" reliability and comfort, or you want to "monitor and tweak your system," TW2 is the controller for you.

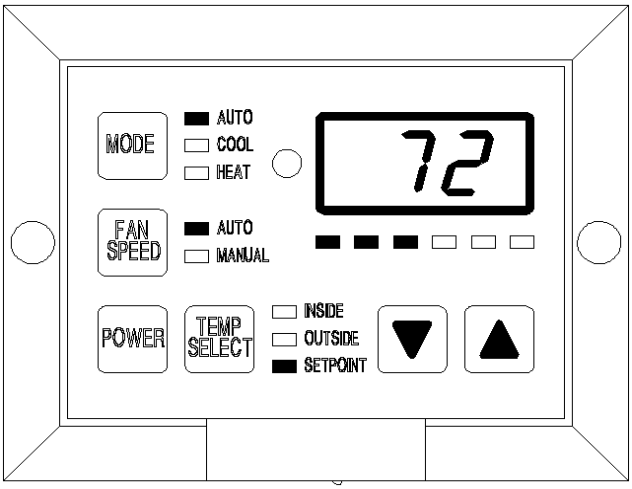

TW2 *Features*

- **Continuous room temperature display with one touch set point or change**
- **Maintains cabin temperature to within 2/ of the set point**
- **Temperature displayed in Fahrenheit or Celsius**
- **Built-in or remote temperature sensor options**
- **Dehumidification mode will automatically control the moisture level when the boat is unattended**
- **Six fan speeds in both automatic and manual operation**
- **Self test mode tests the entire system**
- **4 level compressor fail-safe protection**
- **De-icing cycle to prevent evaporator coil icing**
- **Nonvolatile memory retains programmable settings without batteries**
- **Fault codes displayed on read out**
- **Operates on 115 or 230V, 50 or 60 Hz**

TW2 is compatible with both split system or self-contained direct expansion air conditioning systems as well as chilled water systems from AQUA-AIR. The no-nonsense display panel is simple to operate and gives you access to the entire range of manual, programmable and protection features. The display is available in black or white and can be ordered with a panel door that can be painted or treated to match surrounding decor.

Electronic microprocessor control provides distinct benefits not available on mechanical version controllers. Electronic readouts and push button operations add a contemporary look to your air conditioning system. Many of the real benefits, however, are unseen. By using sensors and electronically monitored tolerances, your TW2 control constantly evaluates critical system operating parameters such AC line voltages and high and low refrigerant pressures. TW2 will shut down the system at the first indication of a problem and display the fault code, thus preventing damage and costly repairs. TW2 even tests its own sensors.

If you are considering new air conditioning for your boat, consider the benefits of TW2. If you are not in the market for an entire new system, ask your AQUA-AIR dealer about retrofitting your current system to TW2.

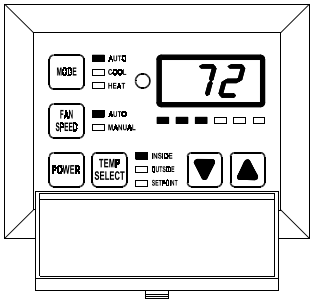

TW2-01

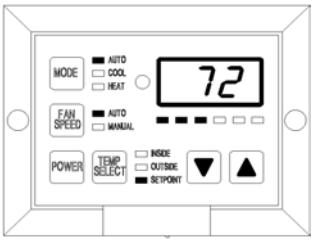

TW2-01B or TW2-01W

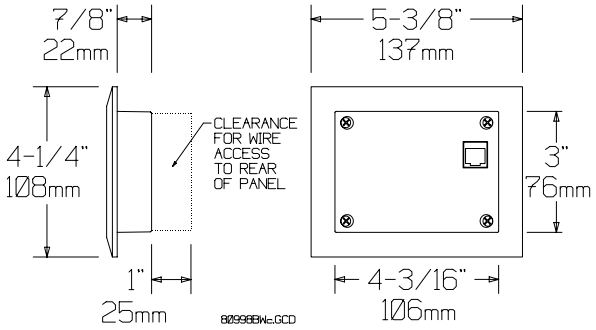

DIMENSIONS

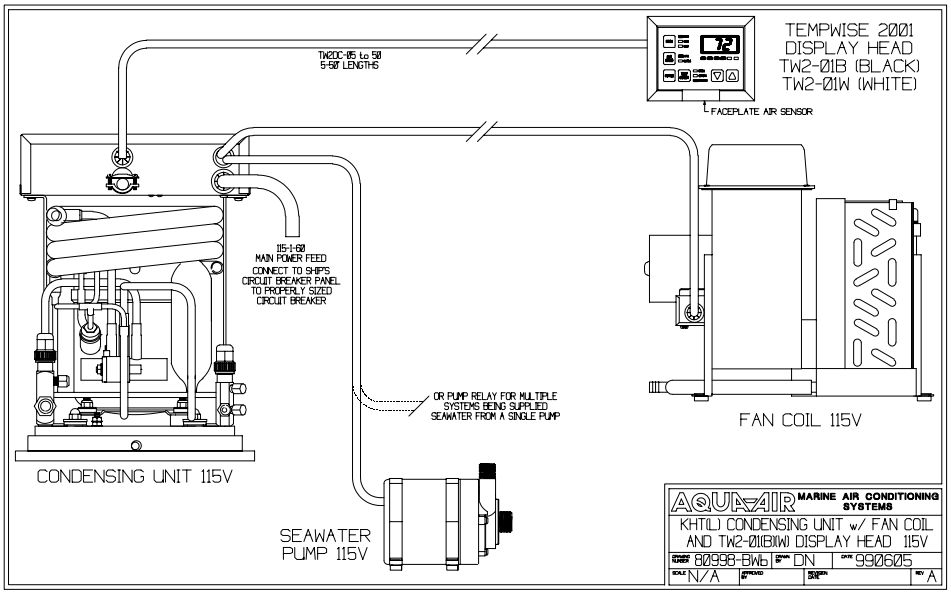

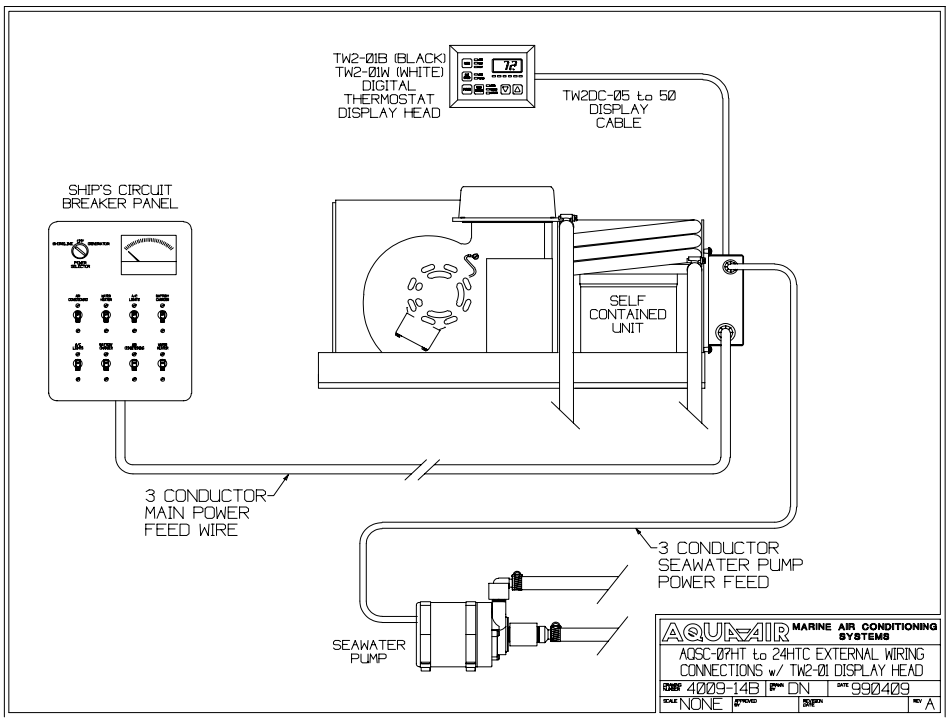

AQUA-AIR MANUFACTURING, division of the James D. Nall Co., Inc.
1050 East 9th Street, Hialeah, Florida 33010 U.S.A.
Ph. 305-884-8363 Fax 305-883-8549 E-mail sales@aquaair.com

AQUA AIR
MARINE AIR CONDITIONING SYSTEMS

SAPPHIRE DIGITAL THERMOSTAT TSV

Sapphire...the most advanced, aesthetically pleasing, rugged digital thermostat to grace the marine air conditioning industry yet. The technology, features and benefits address all our predecessors and those of the competition.

- Sapphire blue LED display
- Virtually unlimited choice of Vimar® bezels
- Largest fan and compressor circuit rating in the business.
- User friendly programming
- Unique fuse protection for circuits.

TSV Digital Thermostat
with Black Vimar Bezel
Actual Size

Aqua-Air Manufacturing, division of the James D. Nall Co., Inc.
1050 East 9th Street, Hialeah, Florida 33010 U.S.A.
Ph. 305-884-8363 Fax 305-883-8549 E-mail sales@aquaair.com

Sapphire Features

- Highest fan circuit rating in the industry…12 AMPS !!
- Sapphire Blue LED's with brightness control
- Dual voltage 115/230 capability
- Display cables are 50% smaller in diameter than the competitions making routing a snap
- Field replaceable fuse protection
- Modular plug connection for high and low pressure switches
- Uses less bulky 4 pin plugs for the display cable instead of the competitions 8
- Continuous room temperature display with one touch set point temperature display or change
- Maintains room temperature to within 2 degrees of set point
- Remote temperature sensing bulb or faceplate air temperature sensor can be used
- Fahrenheit or Centigrade temperature display
- Automatic or six manually selected fan speeds
- High speed and low speed fan limit settings
- LED bar graph visually indicates fan speed
- Fan can be set to run continuous or to cycle on and off as the room reaches the set point
- Dehumidification mode controls room temperature and humidity level
- Non-volatile EEPROM memory. Controller will not lose settings in memory due to power interruptions
- Compressors up to 12A can be operated directly from the controller

THERMOSTAT DIMENSIONS

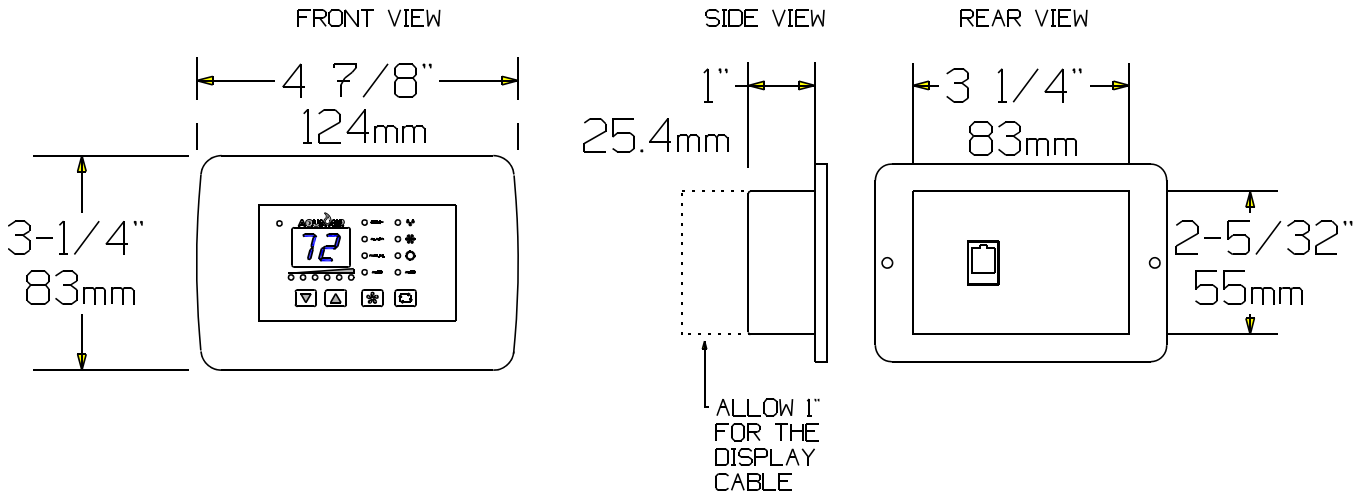

SAPPHIRE DISPLAY

CONTROL MODULE

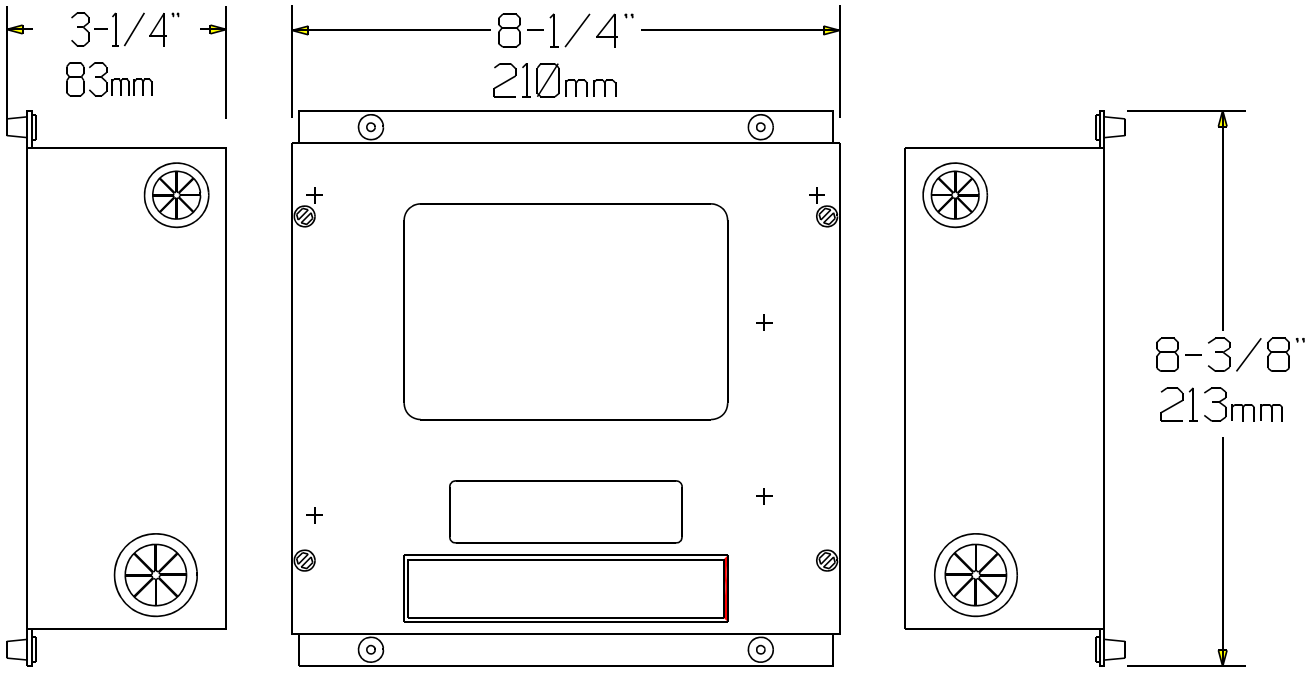

80999-SP.GXD

AQUA AIR

MARINE AIR CONDITIONING SYSTEMS

Sapphire TSV & TWS Series Digital Thermostat for Direct Expansion Split Systems and Self Contained Units

Table of Contents

1. Introduction 3
    - TSV Main Components 3
    - TWS Main Components 4

2. Display Panels for TSV and TWS Thermostats 5
    - TSV Display Panel Features 6
    - TWS Display Panel Features 7

3. Power Module Box 9
    - PC Board Jumpers 9
    - PC Board Features 10
    - PC Board Fuses 11
    - PC Board External Wiring Connections 11

4. Operation of Controls 12

5. Programming Mode 13
    - Programmable Parameter Chart 14
    - Fault Codes 15

6. Controls Operation Flow Charts & Diagrams 16
    - Compressor Operation 17
    - Auto Fan Speed Operation 18
    - Fan Speed Process Diagram 19
    - Cooling Mode Process Diagram 20
    - Heating Mode Process Diagram 21
    - Auto Mode Process Diagram 22
    - Dehumidification Process Diagram 23
    - Compressor Process Diagram 24
    - Seawater Pump Process Diagram 24
    - Reversing Valve Process Diagram 25
    - Deicing Mode Process Diagram 26
    - LP-HP-LA Alarm Process Diagram 27

7. Wiring Diagrams 28

8. Component Dimensions 32
    - TSV 32
    - TWS 33

1. Introduction

The Aqua-Air Sapphire TSV and TWS Series Direct Expansion (D/X) Thermostats have been designed specifically to operate either split systems or self contained units. These systems will usually have a compressor, reversing valve, seawater pump and fan motor(s) . All of these components can be regulated by these thermostats.

The only difference between the TSV and the TWS models is the display head appearance. The TSV has a Vimar® brand bezel surrounding the display and button portion of the display head. The TWS was designed as a retrofit for the older Aqua-Air TW-2000 digital thermostat. The TWS display head is exactly the same size as the older TW-2000. Both controls operate in exactly the same way.

The TSV Thermostat is comprised of the following main components:

1. Display Panel (TSV-01)
2. Display Cable (TSWDC-15)
3. Power Module Box (TSV-02)
4. Room Air Sensor (TW2-SENSOR-07)
5. Outside Air Temperature Sensor (TW2-SENSOR-XX) (optional)

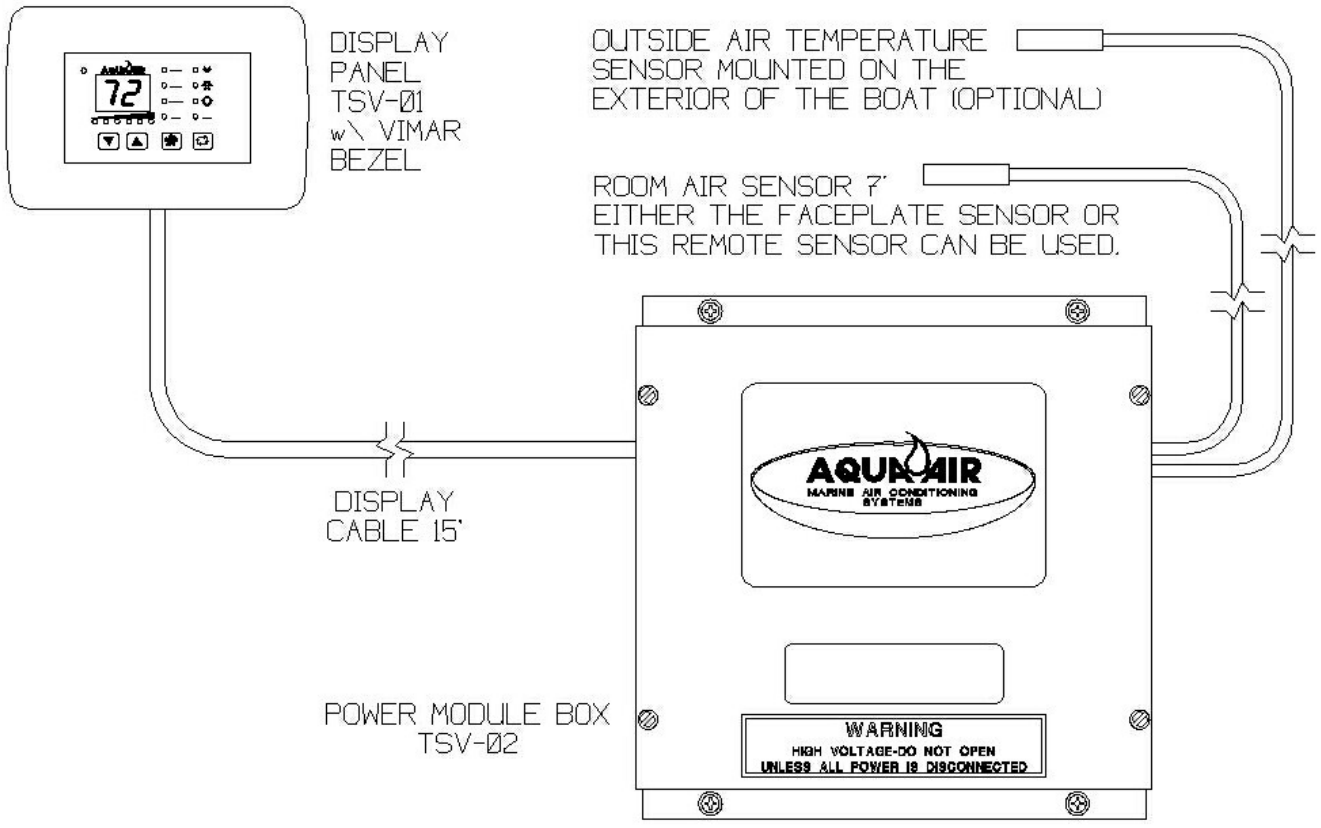

The TWS Thermostat is comprised of the following main components:

1. Display Panel (TWWS-01)
2. Display Cable (TSWDC-15)
3. Power Module Box (TSV-02)
4. Room Air Sensor (TW2-SENSOR-07)
5. Outside Air Temperature Sensor (TW2-SENSOR-XX) (optional)

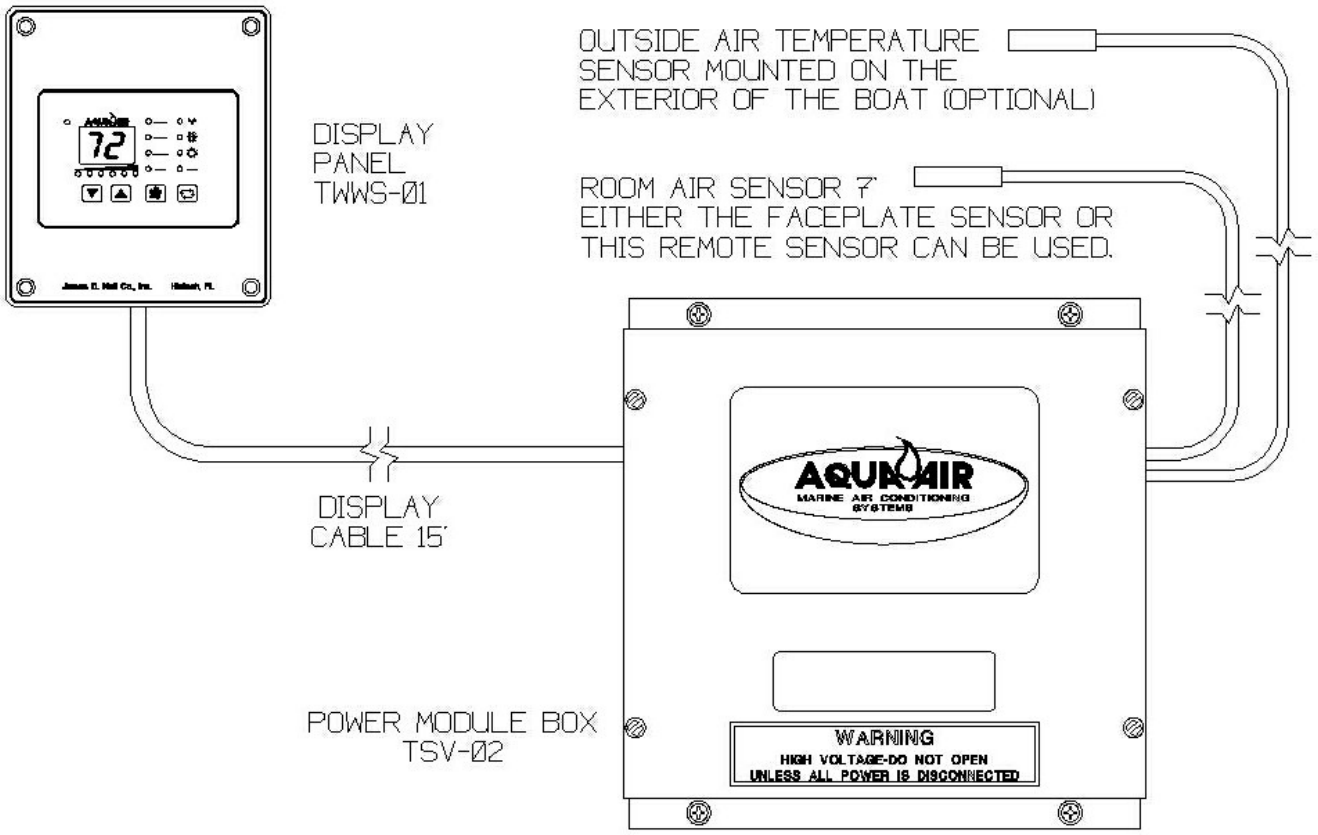

2. Display Panel

The TSV-01 and TWWS-01 Display Panel is the user interface with the TSV Thermostat. It allows the user to make all necessary changes to operating modes, temperature settings and fan speed settings. It also allows the user to make changes to a set of Programming Parameters that controls many of the features of the thermostat.

The Display Panel has been designed to use the Vimar Idea Series metal bezels giving you an almost unlimited number of color options to match any decor. The bezel snaps on and off easily and it hides all of the mounting screws for the display panel

On the following page is a diagram showing all of the features of the Display Panels. The features are applicable for both TSV-01 & TWWS-01 display heads. Each feature has a number associated with it.

Features of the TSV-01 and TWWS-01 Display Panels are:

1. MODE BUTTON - The Mode Button is used to select one of the four operating modes and standby (off) mode. Pressing and releasing the Mode Button will advance you to the next mode. Continue to do this until you have reached the desired mode. The available modes are as follows:

STANDBY	Thermostat is OFF, no Cooling or Heating functions are available. The fan can be operated in the Manual mode. Indicated by LED 11.
DEHUMIDIFICATION	Thermostat is in the Dehumidification Mode indicated by LED 14.
COOLING	Thermostat is in the Cooling Mode only, indicated by LED 15.
HEATING	Thermostat is in the Heating Mode only, indicated by LED 16.
AUTO	Thermostat is in the Auto Mode where it will automatically choose between Cooling and Heating as the room temperature dictates. This mode is indicated by LED 17.

2. FAN BUTTON - The Fan Button is used to select between AUTO and MANUAL Fan Speed Control as indicated by LED's 12 and 13 respectively. To go from AUTO to MANUAL Mode press the Fan Button once. To change Fan Speeds while in MANUAL Mode press the Fan Button once and then the Up or Down Button to increase or decrease, respectively, the Fan Speed. To switch from MANUAL to AUTO Mode press the Fan Button twice

TSV SAPPHIRE SERIES
DIGITAL DISPLAY PANEL

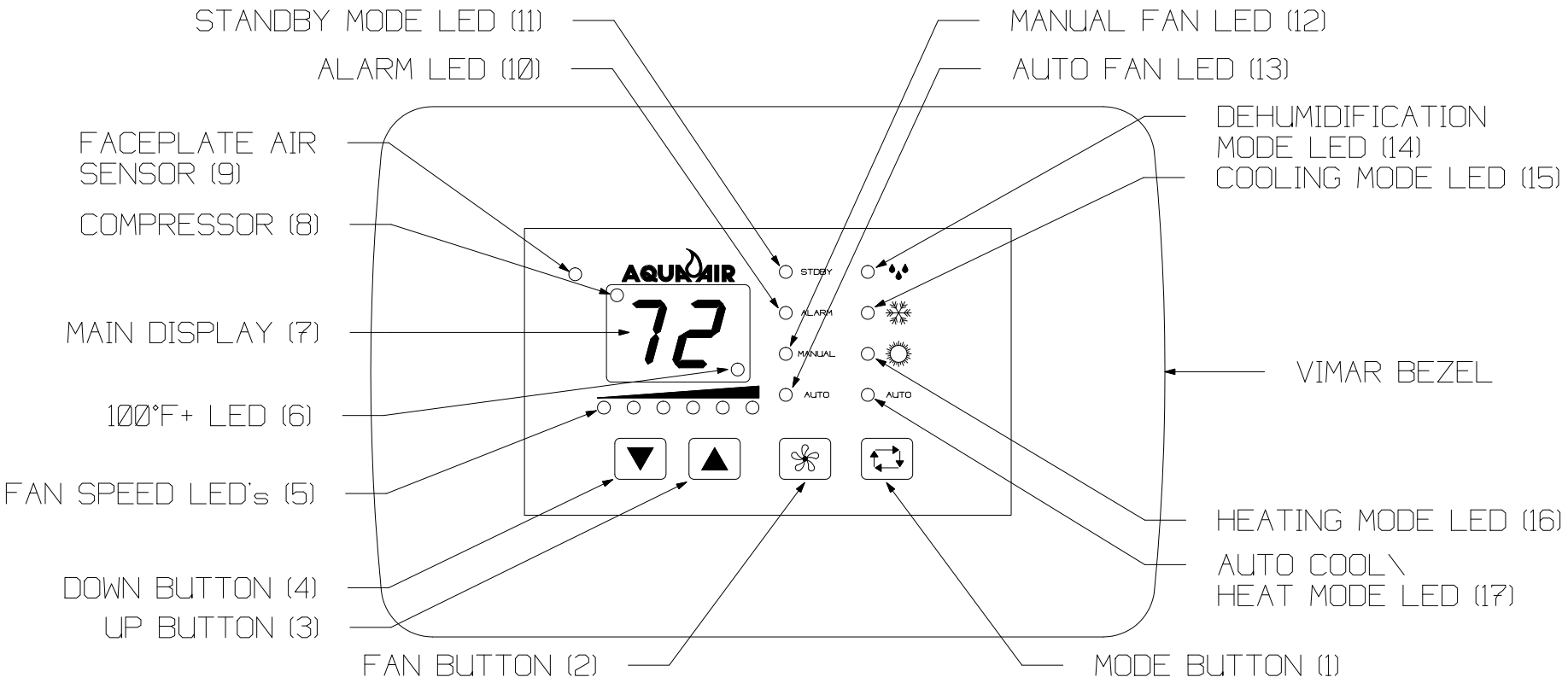

TWS SAPPHIRE SERIES
DIGITAL DISPLAY PANEL

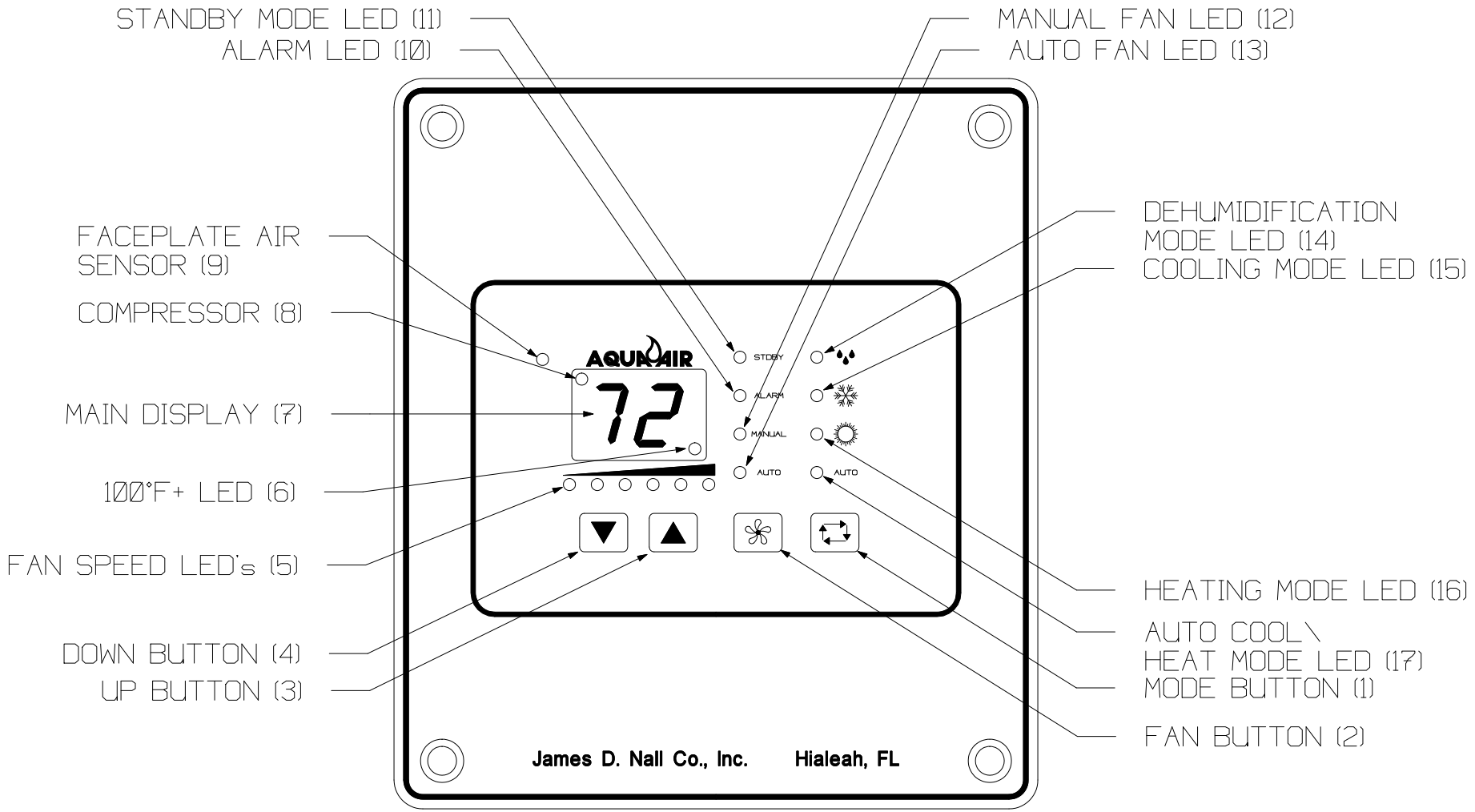

3. UP BUTTON - The Up Button is used to increase values for set points, fan speeds and programmable parameters. During normal operation, momentarily pressing the Up Button will display the Set Point. Continued pressing of the Up Button will increase the Set Point

4. DOWN BUTTON - The Down Button is used to decrease values for set points, fan speeds and programmable parameters. During normal operation, momentarily pressing the Down Button will display the Set Point. Continued pressing of the Down Button will decrease the Set Point.

   To view the Outside Air Temperature (OAT) sensed by the optional OAT Sensor:

   1. Press and HOLD the Down Button (4)
   2. Press and RELEASE the Up Button (3)

5. FAN SPEED LED's - These six LED's indicate the current Fan Speed 1-6. Low Speed (#1) is the left most LED and High Speed (#6) is indicated by the LED on the far right.

6. 100°F+ LED - Indicates that the actual temperature displayed is in excess of 100° F. Add the value displayed to 100 to get the actual temperature. If the 100°F LED is lit and the display shows 10 then the actual temperature would be 110°F.

7. MAIN DISPLAY - This is a 2 digit, 7 segment LED display. Normally the current room temperature is displayed. It can also display the Set Point, Water Temperature, Programmable Parameters and Alarm codes.

8. COMPRESSOR LED - This LED indicates if the Compressor output has been turned on (in either the Cooling or Heating mode).

9. FACEPLATE AIR SENSOR - The TSV can use either this Faceplate Air Sensor to sense the room temperature or the Air Sensor that is plugged into the Power Module PC Board. This is selected by Programmable Parameter B1. If the Faceplate Sensor is used it is not necessary to have the Air Sensor plugged into the PC Board.

10. ALARM LED - Indicates that the control is in a fault condition.

11. STANDBY MODE LED - Indicates that the control is in the Standby Mode. All Cooling and Heating functions are turned off. If the fan is in the Auto Mode then it will be turned off. If the Fan is in the Manual Mode then the Fan will still operate at the last fan speed selected.

12. MANUAL FAN LED - Indicates the Fan Speed is in the Manual Speed Selection Mode

13. AUTO FAN LED - Indicates the Fan Speed is in the Automatic Speed Selection Mode

14. DEHUMIDIFICATION MODE LED - Indicates that the control is in the Dehumidification Mode

15. COOLING MODE LED - Indicates the control is in the Cooling Mode

16. HEATING MODE LED - Indicates the control is in the Heating Mode

17. AUTO COOL/HEAT MODE LED - Indicates the control is in the Automatic Cooling or Heating Mode. In this mode the control will automatically select, based on the room temperature and the set point, whether the control is operating in the Cooling or Heating Mode.

3. Power Module Box

The Power Module Box is comprised of the Main Power PC Board enclosed inside of an aluminum enclosure. The PC Board's main features are shown on the following page.

POWER MODULE PC BOARD JUMPERS				
Jumper	**Description**	**Type**	**Specification**	**Notes**
JP1	Chillwater / Direct Expansion Selection	Wire	C/W: Jumper Cut D/X: Jumper Not Cut	Do not cut with power applied to board.
JP3	Compressor Relay Test	3 pos. pin	Install jumper in positions 1 & 2 to energize the compressor	
JP4	Pump Relay Test	3 pos. pin	Install jumper in positions 1 & 2 to energize the pump	
JP5	Reversing Valve Relay Test	3 pos. pin	Install jumper in positions 1 & 2 to energize the reversing valve	
JP6	Low Pressure Switch	Wire	LPS connected to J7, positions 2 & 3: Cut No LPS connected: Not Cut	

TSV POWER MODULE P.C. BOARD
TWS-PCBOARD

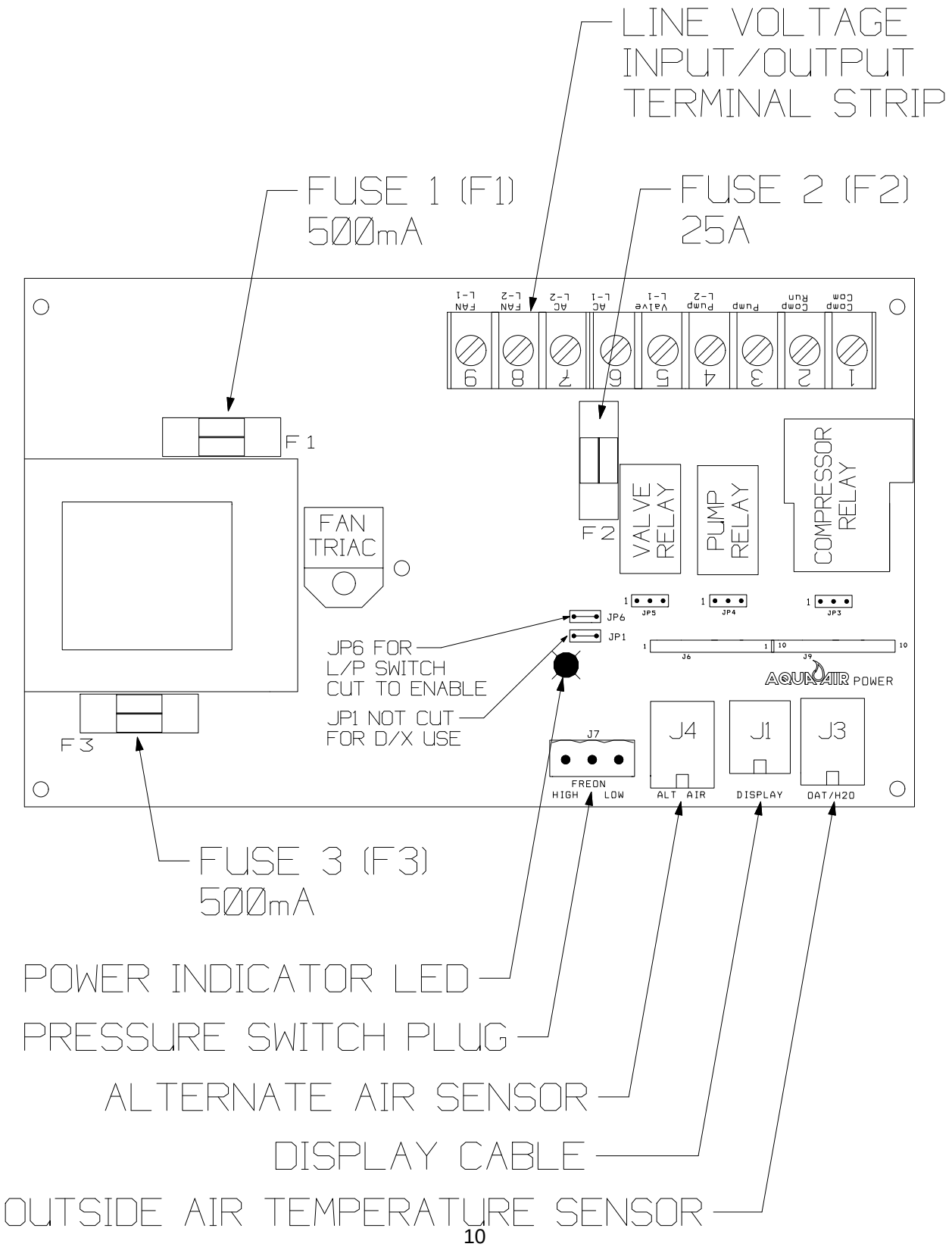

POWER MODULE PC BOARD FUSES			
Fuse	**Description**	**Fuse Amperage Rating**	**Fuse Size Part Number**
F1	Protects against a line voltage short circuit on the primary side of the transformer TX	500 mA (1/2 A)	5mm x 20mm TWS-PCBFUSE1
F2	Protects against a short circuit on the Compressor, Reversing Valve or Seawater Pump circuits.	20 A	5mm x 20mm TWS-PCBFUSE1
F3	Protects against a control circuit short circuit on the secondary side of the transformer TX	500 mA (1/2 A)	5mm x 20mm TWS-PCBFUSE1

Basic External Wiring Connections to the TSV and TWS PC Board Located in the Power Module Box

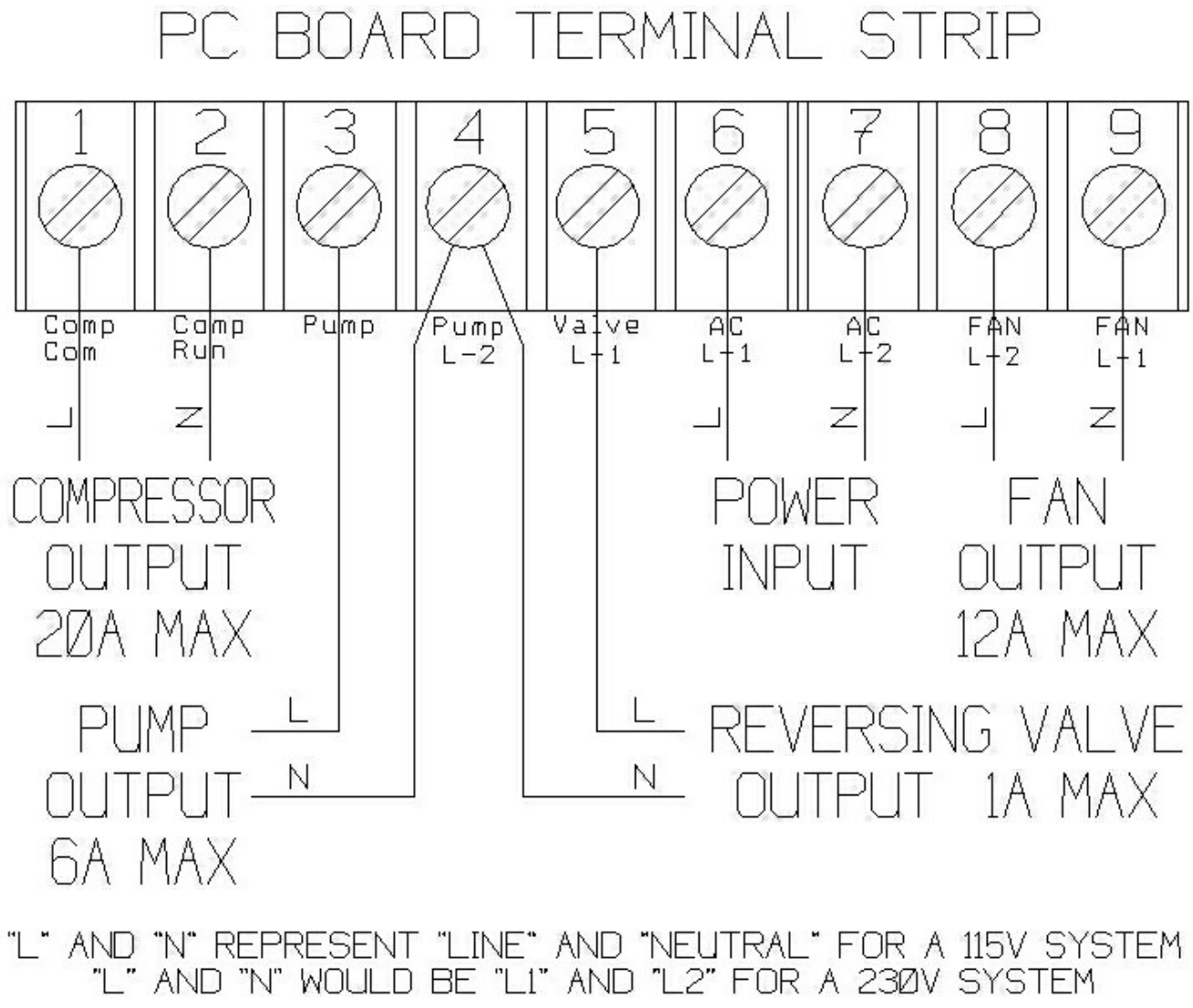

4. Operation

Below are the steps necessary for the basic operation of the control.

Entering the Cooling Mode
Press and release the Mode Button (1) until the Cooling Mode LED (15) is lit.

Entering the Heating Mode
Press and release the Mode Button (1) until the Heating Mode LED (16) is lit.

Automatic (Auto) Cool / Heat Mode
Press and release the Mode Button (1) until the Auto LED (17) is lit

Entering the Dehumidification Mode
Press and release the Mode Button (1) until the Dehumidification Mode LED (14) is lit.

Turn the Control OFF (Standby Mode)
Press and release the Mode Button (1) until the Standby Mode LED (11) is lit.

View the Set Point Temperature
Press and release either the Up Button (3) or the Down Button (4).

Increasing the Set Point Temperature
Press and release the Up Button (3) until you reach the desired temperature

Decreasing the Set Point Temperature
Press and release the Down Button (4) until you reach the desired temperature

Putting the Fan Mode into Manual
Press and release the Fan Button (2) until the Manual Fan LED (12) is lit

Increasing the Fan Speed in the Manual Fan Mode
Press and release the Fan Button (2) and then press and release the Up Button (3) until you reach the desired speed as indicated by the Fan Speed LED's (5).

Decreasing the Fan Speed in the Manual Fan Mode
Press and release the Fan Button (2) and then press and release the Down Button (4) until you reach the desired speed as indicated by the Fan Speed LED's (5).

Putting the Fan Mode into Auto
Press and release the Fan Button (2) twice

Displaying the Outside Air Temperature
Press and hold the Down Button (4) then press and release the Up Button (3)

Changing the Fan Speeds in the Standby Mode
Press and release the Up Button (3) or the Down Button (4) until the desired speed is reached. To turn the fan off in the Standby Mode press the Down Button (4) until all of the Fan Speed LED's are off.

5. Entering the Programming Mode

There are currently 17 different programmable parameters in the TSV and TWS Thermostats. All of these parameters can be changed from the Display Panel with some simple keystrokes.

The Program Mode can ONLY be entered while the control is in the Standby Mode

To Program the TSV Control:

1. Press the Mode Button until the control is in the Standby Mode which is indicated by the Standby Mode LED (11)

2. Press the Up Button and the Down Button at the SAME time. The first Programmable Parameter code “P1" will appear in the window for 2 seconds and then the P1 setting that is currently stored in the control will appear.

3. To change the parameter setting press and release the Up or Down Buttons.

4. The Fan Button advances you to the next parameter. Advancing to the next parameter SAVES the previous parameter setting. If you do not advance to the next parameter the setting WILL NOT BE SAVED unless you press the Mode Button to exit the Programming Mode (see 5 below).

5. Pressing the Mode Button exits the Programming Mode. Any changes made to any of the parameter settings will be saved.

6. If you do not press any buttons for 30 seconds the control will automatically exit from the Program Mode. The last parameter change will NOT BE SAVED.

Programmable Parameters				
Parameter Number	**Description**		**Default**	**Range**
P1*	High Fan Speed Limit (% of input voltage)		100 “00."	56 - 100 (100 = 00.)
P2* **	Low Fan Speed Limit (% of input voltage)		50	30 - 55
P3	Compressor Staging Time Delay		15 secs	5-135 secs
P4	Temperature Sensor Calibration		0	-10° to +10° F
P5	Failsafe Mode		3	Off 1=Continuous, No Display 2=Continuous w/ Display 3=Failure, Reset Required
P6	Low A/C Voltage Cutoff	115 VAC	85VAC	Off - 75 to 100
		230 VAC	185 VAC	Off - 175 to 200
P7	De-Icing Cycle		0	0=Off 1-3 minutes
P8	Unused - reserved		N/A	N/A
P9	Display LED Brightness Control		13	4 = min 13 = max
A1	Displays °F or °C		°F	°F / °C
A2	Cycle Pump with Compressor or Continuous Pump Operation		Off	OFF=Cycle w/ Compressor ON=Continuous Running
A3	Reverse Fan Speed in Heating Mode		rE	No = Normal rE = Reverse
A4	Continuous Fan Operation or Cycling on Demand		Co	CY = Cycle Co = Continuous
A5**	Reverse Cycle Heat or Electric Element Heat		nor	nor = Reverse Cycle Heat EL = Electric Heat
A6	Fan Motor Type, Shaded Pole or Split Capacitor		SP	SP = Shaded Pole SC = Split Capacitor
A7	Reset Memorized Programming Defaults		nO	nO = Normal Rs = Reset Default
A8	Unused - reserved		N/A	N/A
A9	Unused - reserved		N/A	N/A

CONTINUED ON THE NEXT PAGE

Programmable Parameters (cont)			
Parameter Number	**Description**	**Default**	**Range**
b1	Air Temperature Sensed from the Display Panel or the Air Sensor connected to the PC Board	on	on = PC Board of = Display Panel
b2	Delay Before Fan Turns Off	30s	30 - 199 seconds

* P1 and P2 values are expressed as a percentage of the input voltage. If the setting for P1 is 90 then the maximum voltage output at high fan speed (speed 6) will be approximately 90% of the input voltage. As you are changing the settings in P1 and P2 the fan will operate and change according to the settings you are entering.

** If Electric Heat is selected (A5 = EL) then P2 must NOT be set lower than 50 and parameter b2 must be set to a minimum of 60 seconds.

FAULT CODES	
Code	**Description**
AA	Air Sensor Failure or Disconnected. If you get this error code and you intend to use the air sensor on the Display Panel change Parameter **b1** to “of”.
E1	Display cable damaged. Check to see if the cable has been cut or otherwise damaged.
HP	High Refrigerant Pressure. The seawater flow to the condensing unit has been interrupted
LA	Low Voltage Input to Power Module Box. Check your incoming voltage to the Power Module Box and verify that it is within +/-10% of the rated voltage
LP	Low Refrigerant Pressure. This fault can be due to restricted air flow through the evaporator coil or a refrigerant leak.

6. Control Operation Flow Charts and Diagrams

On the following pages are flow charts and graphic representations of how the control operates the compressor, fan, reversing valve and pump in each of the 4 operating modes. Some of the abbreviations used are as follows:

TERM	Definition
Abs	Absolute Value. The Absolute Value of 5 is 5. The Absolute Value of (-3) is 3. The Absolute Value of an equation that returns a negative number is always a positive number. Therefore Abs (3-8) = 5
DELTA	Difference between two values. As used in this manual it is the difference between two temperatures
Hysteresis	The lag between making a change, such as increasing or decreasing temperature, and the response or effect of that change. It typically refers to turn-on and turn-off points. For example, if a thermostat set for 70 degrees turns on when the temperature reaches 68 and turns off at 72, the hysteresis is the range from 68 to 72.
LED	Light Emitting Diode. These are all of the lights on the display panel. The two 7 segment numerical displays are each made up of 7 individual diodes.
OAT	Outside Air Temperature
Tair	Air Temperature as sensed by either the Display Panel or Room Air Sensor
Tset	Set Temperature of the thermostat

COMPRESSOR OPERATION

COOLING MODE

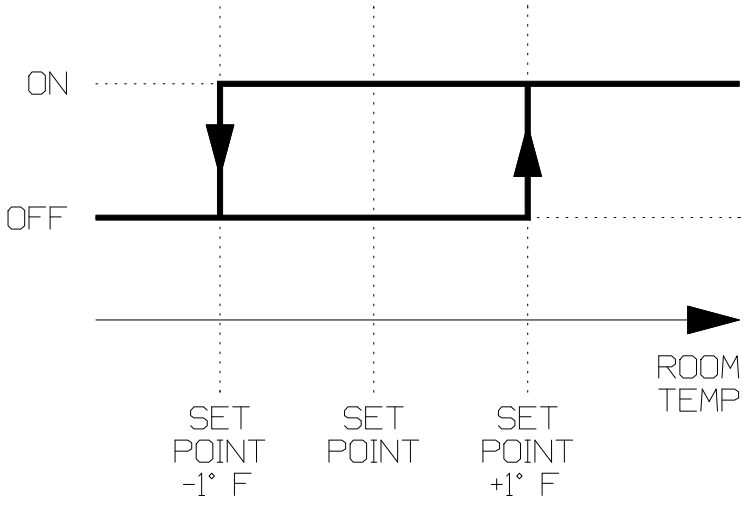

HEATING MODE

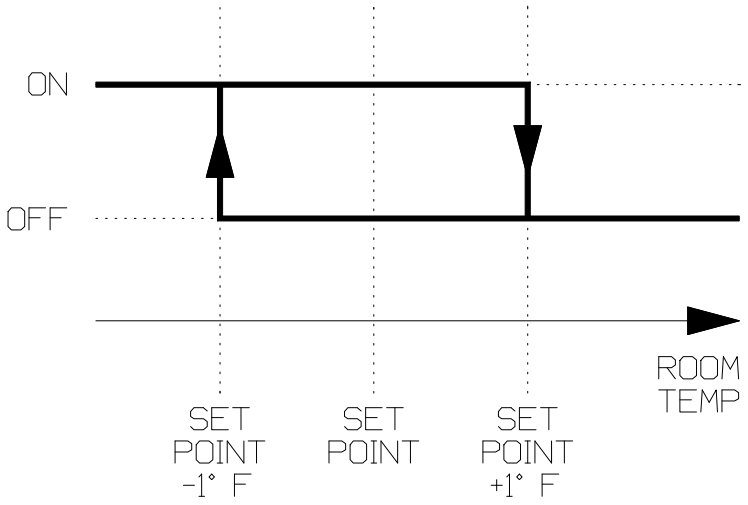

AUTOMATIC FUNCTION MODE CHANGEOVER

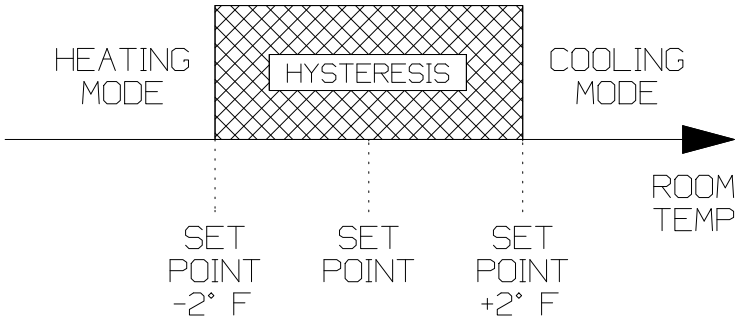

AUTO FAN SPEED OPERATION

COOLING MODE

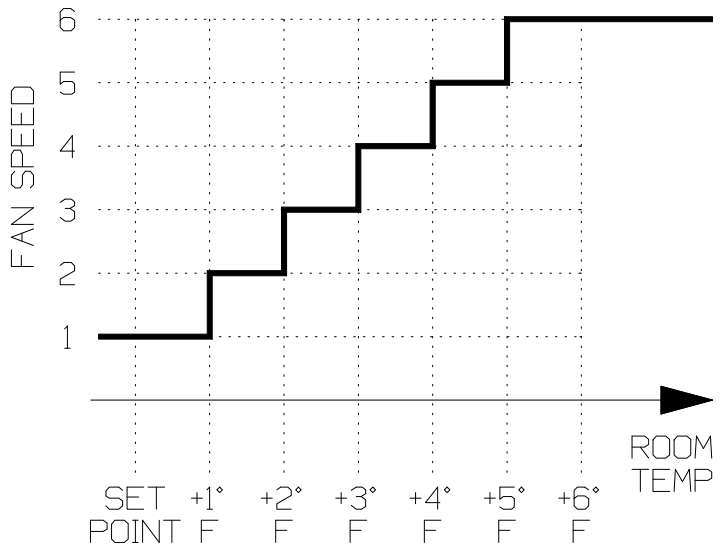

HEATING MODE
PARAMETER A3 = NORMAL (No)

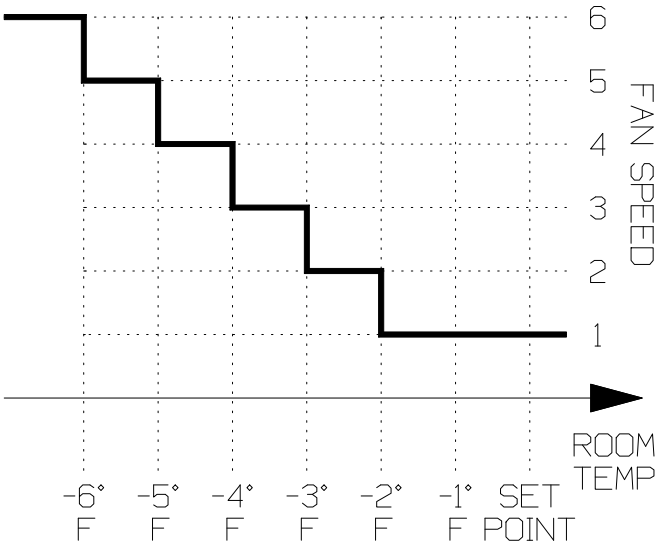

HEATING MODE
PARAMETER A3 = REVERSE (rE)

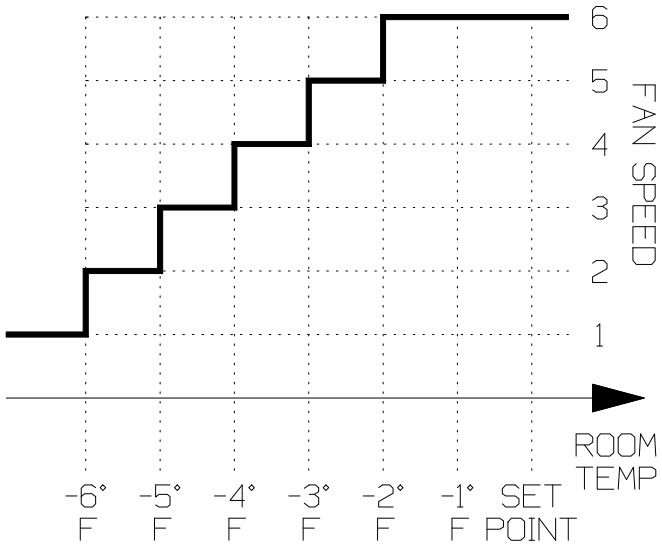

FAN OPERATION & SPEED SELECTION

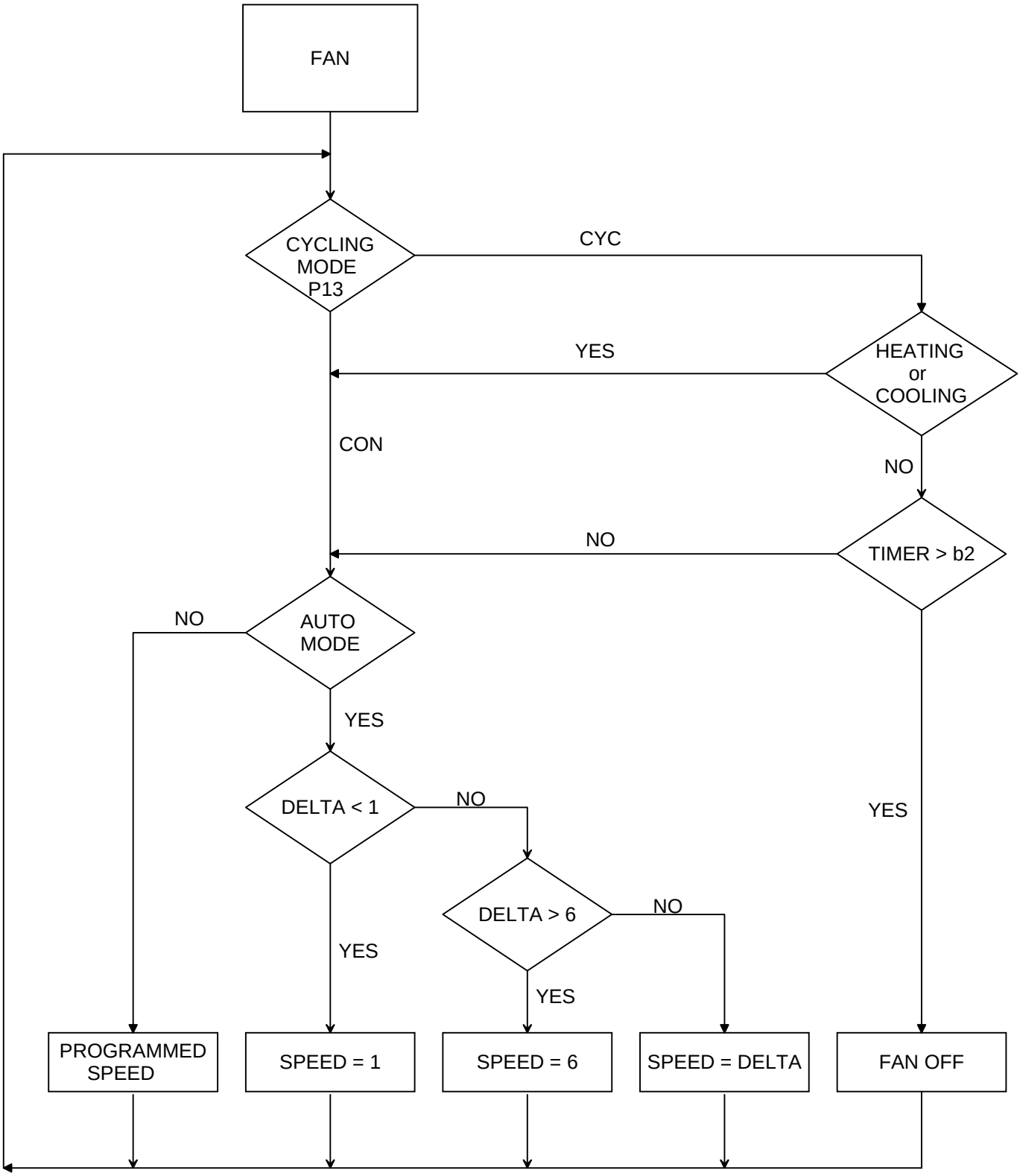

Normal Fan Operation
DELTA = Abs(Tair - Tset)

Reverse Fan Operation
DELTA = Abs[Abs(Tair - Tset) - 6]

COOLING MODE

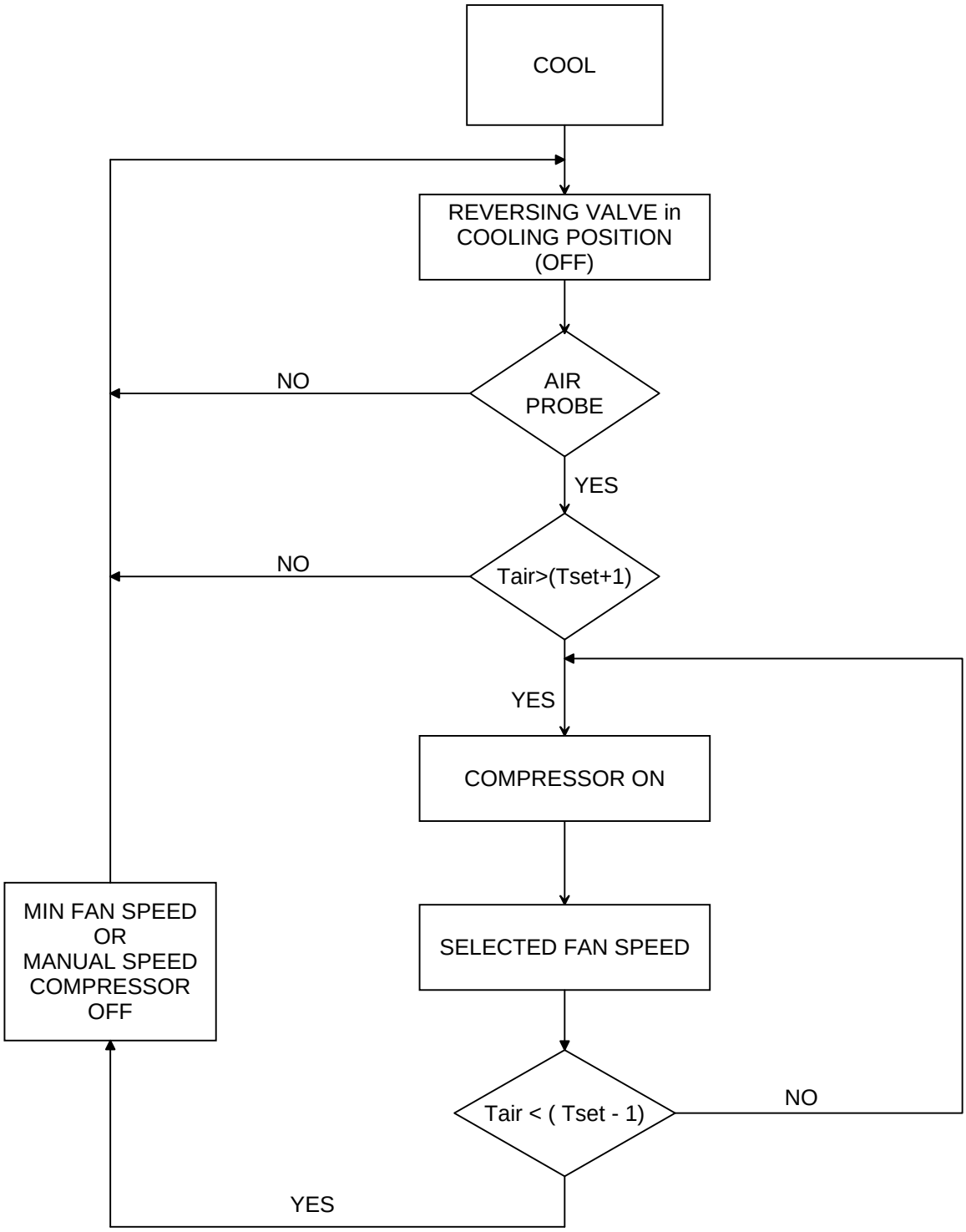

HEATING MODE

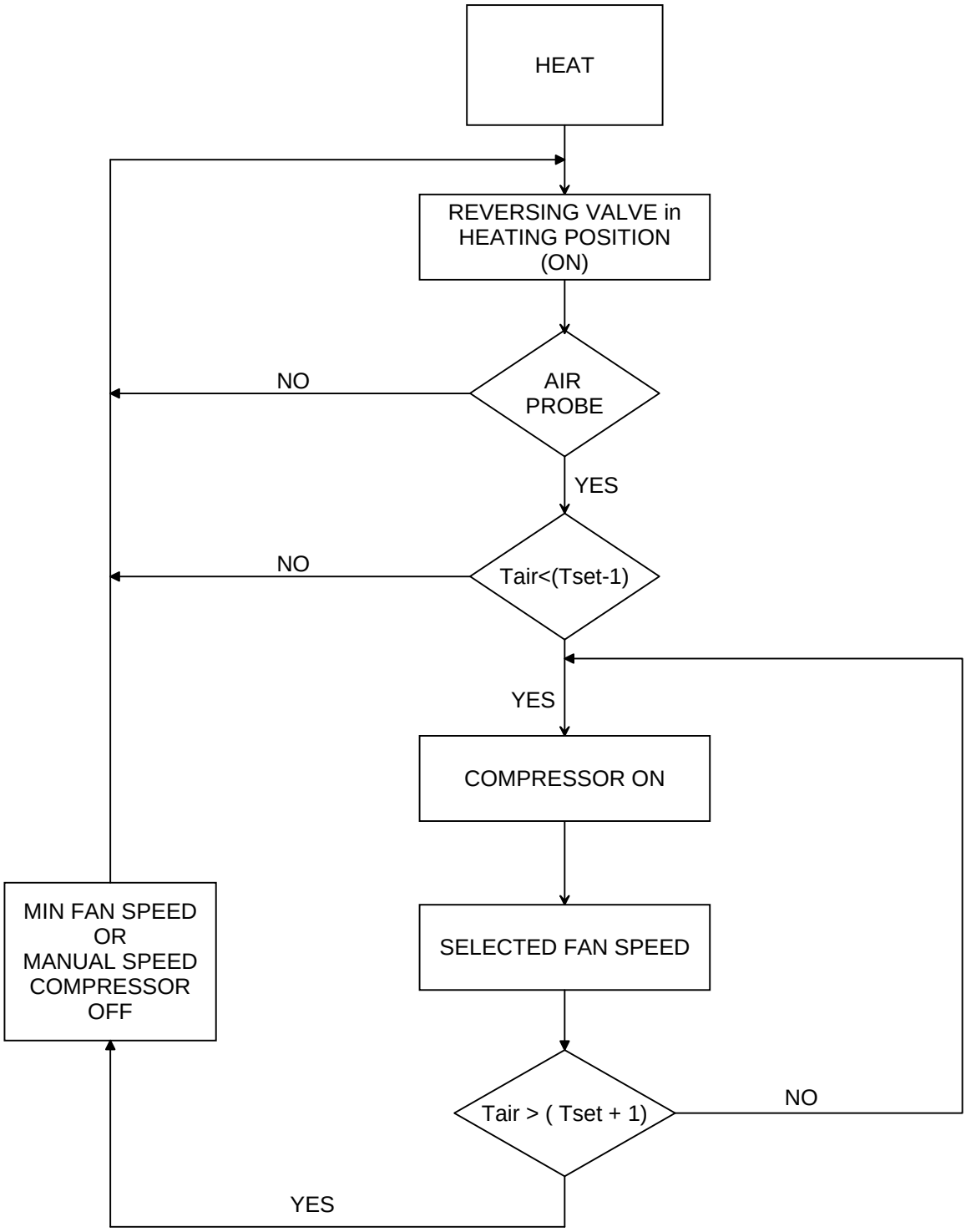

AUTO MODE

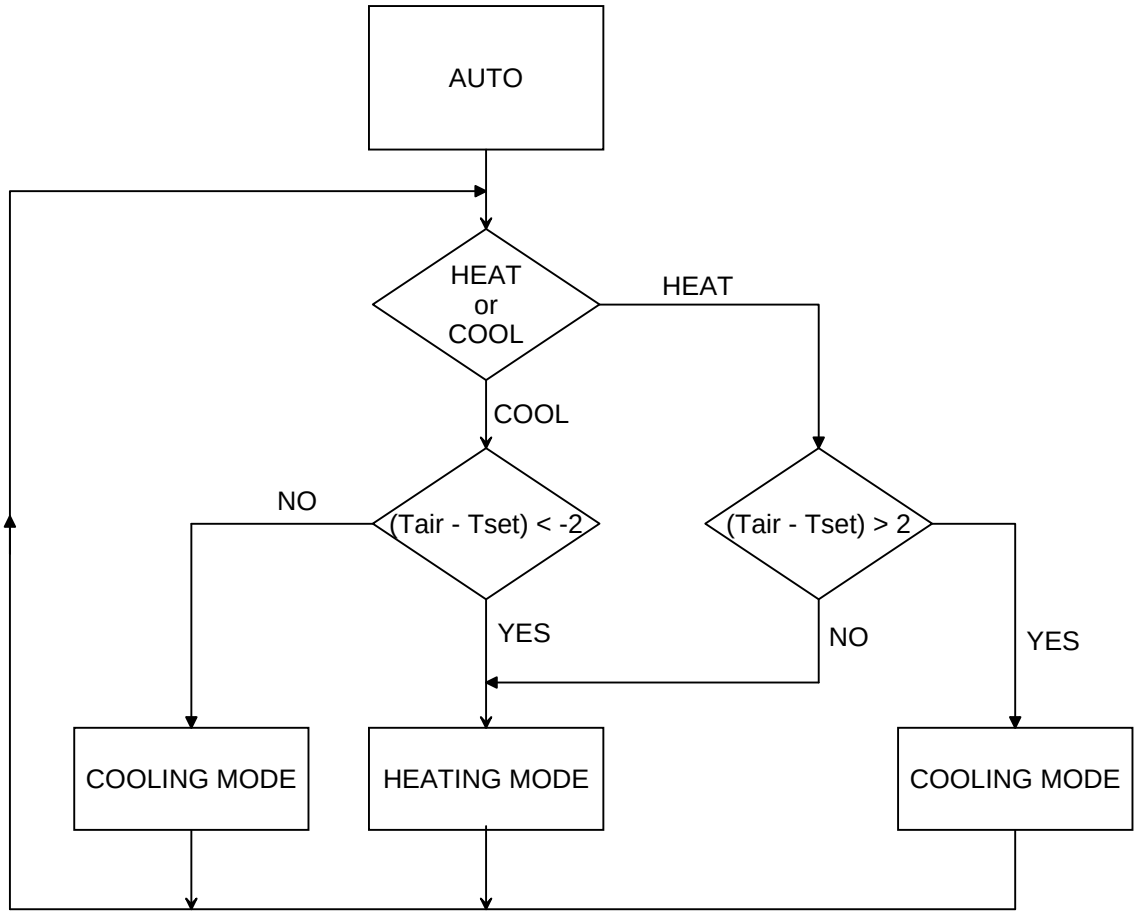
AUTO
HEAT
or
COOL
HEAT
COOL
NO
(Tair - Tset) < -2
(Tair - Tset) > 2
YES
NO
YES
COOLING MODE
HEATING MODE
COOLING MODE

DEHUMIDIFICATION MODE

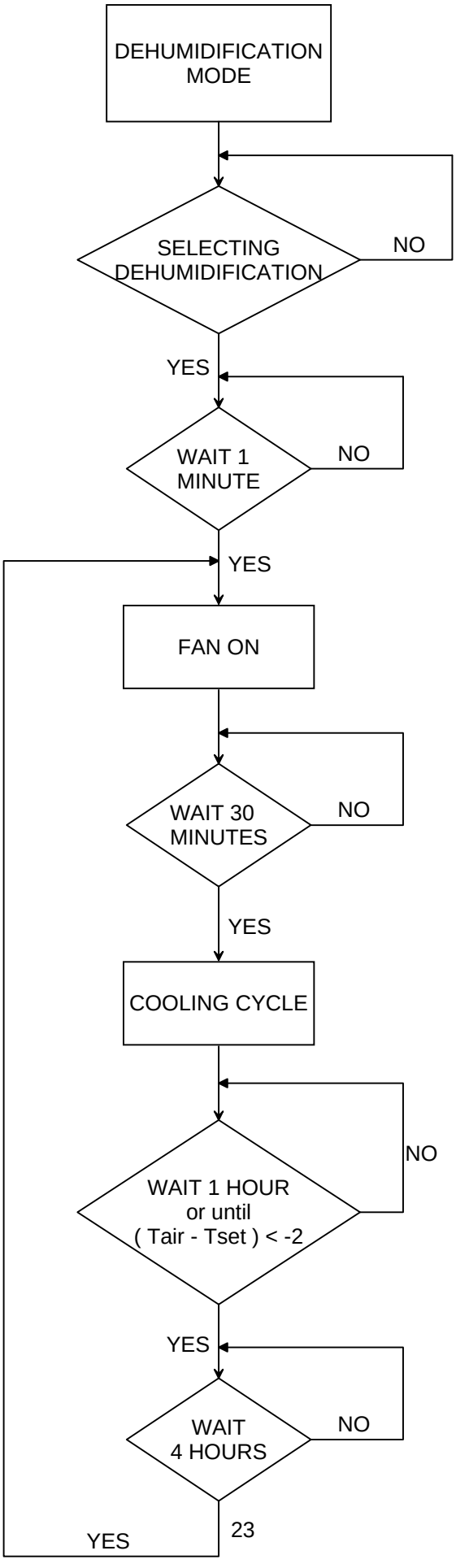

COMPRESSOR

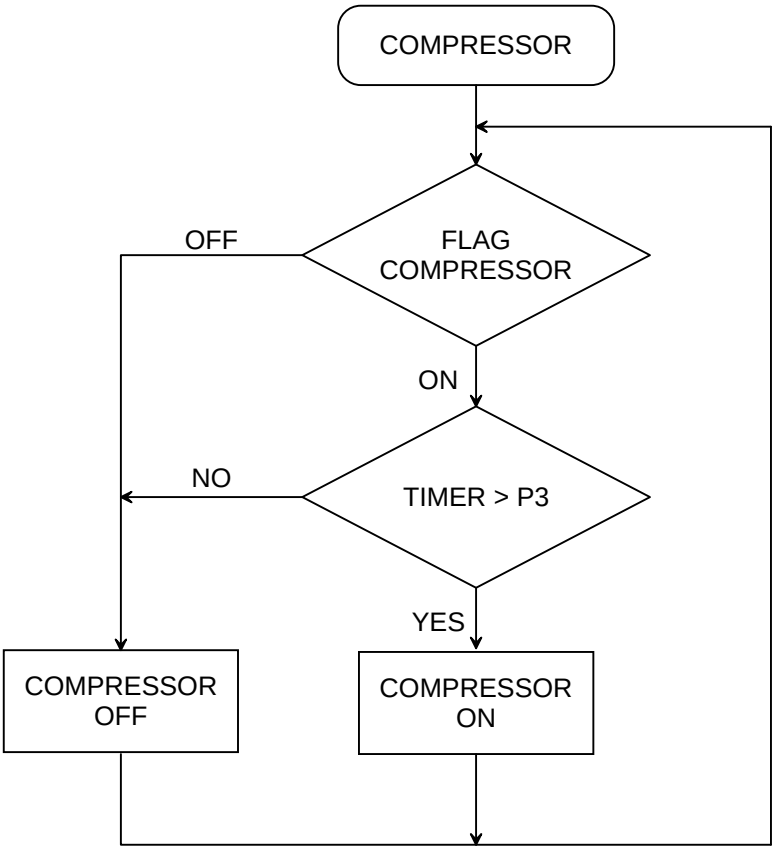

P3 REFERS TO PROGRAMMABLE PARAMETER P3

SEAWATER PUMP

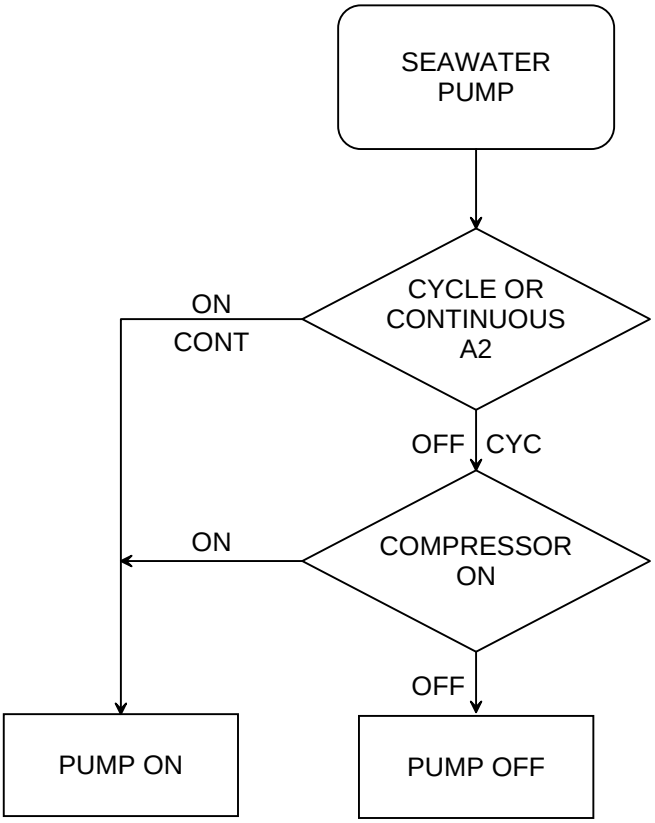

A2 REFERS TO PROGRAMMABLE PARAMETER A2

REVERSING VALVE

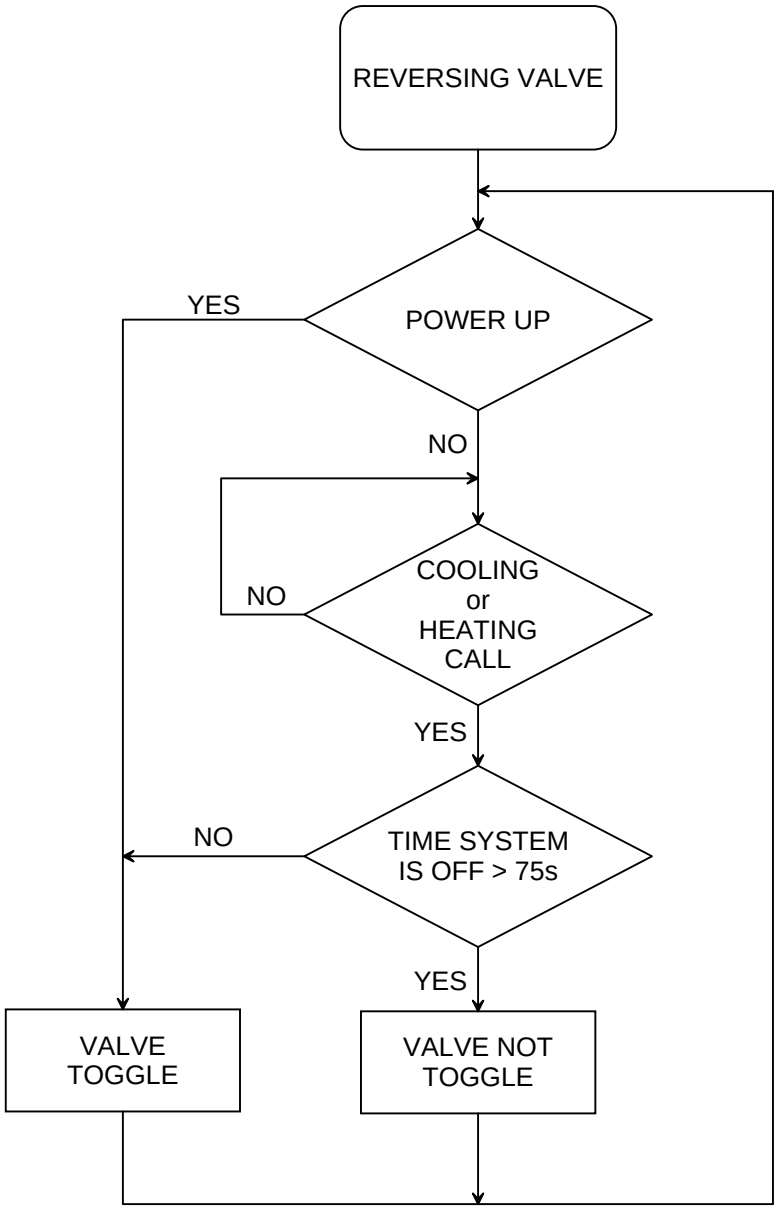

DEICING MODE

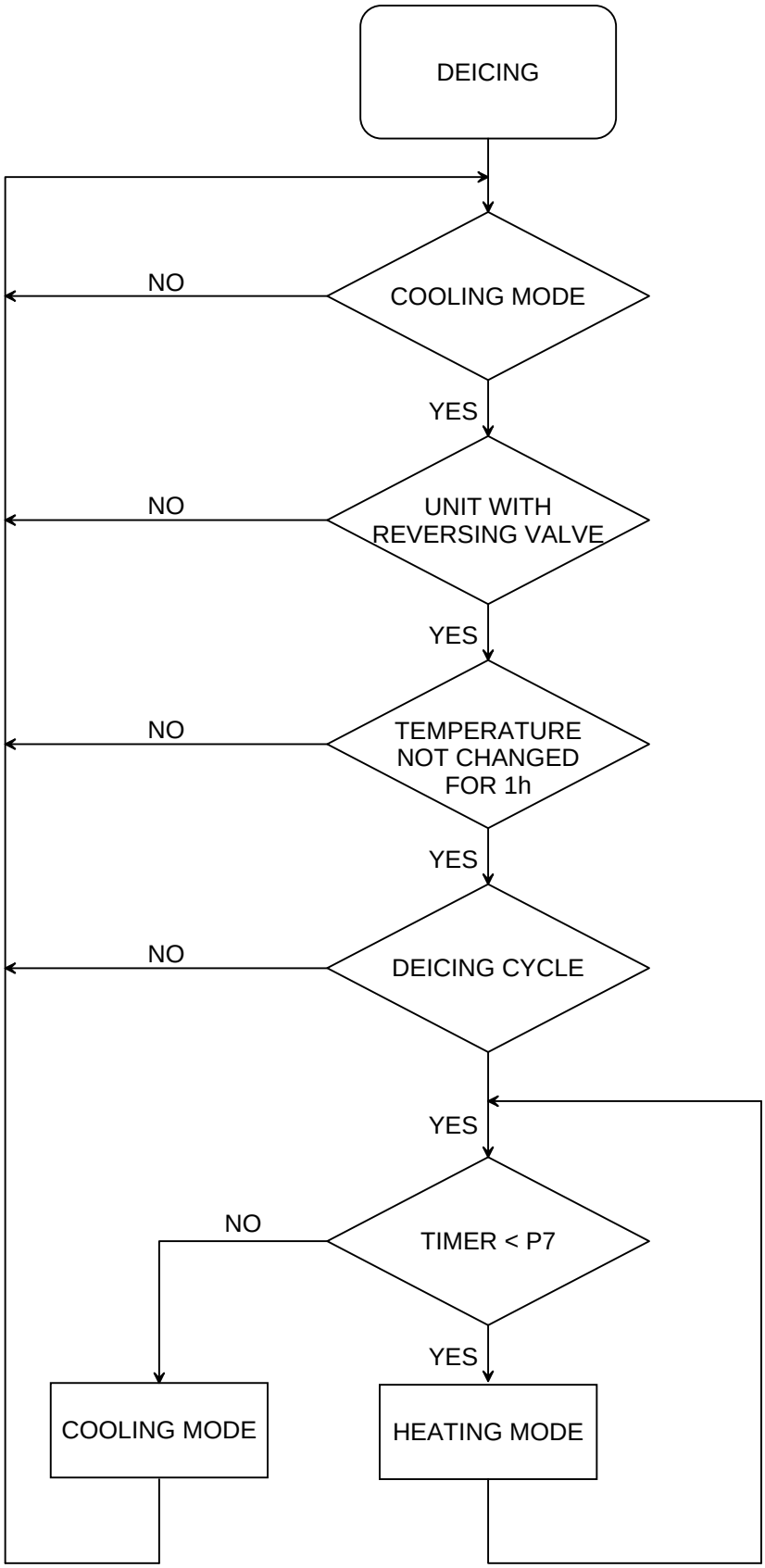

P7 REFERS TO PROGRAMMABLE PARAMETER P7

LP - HP - LA ALARM (P5)

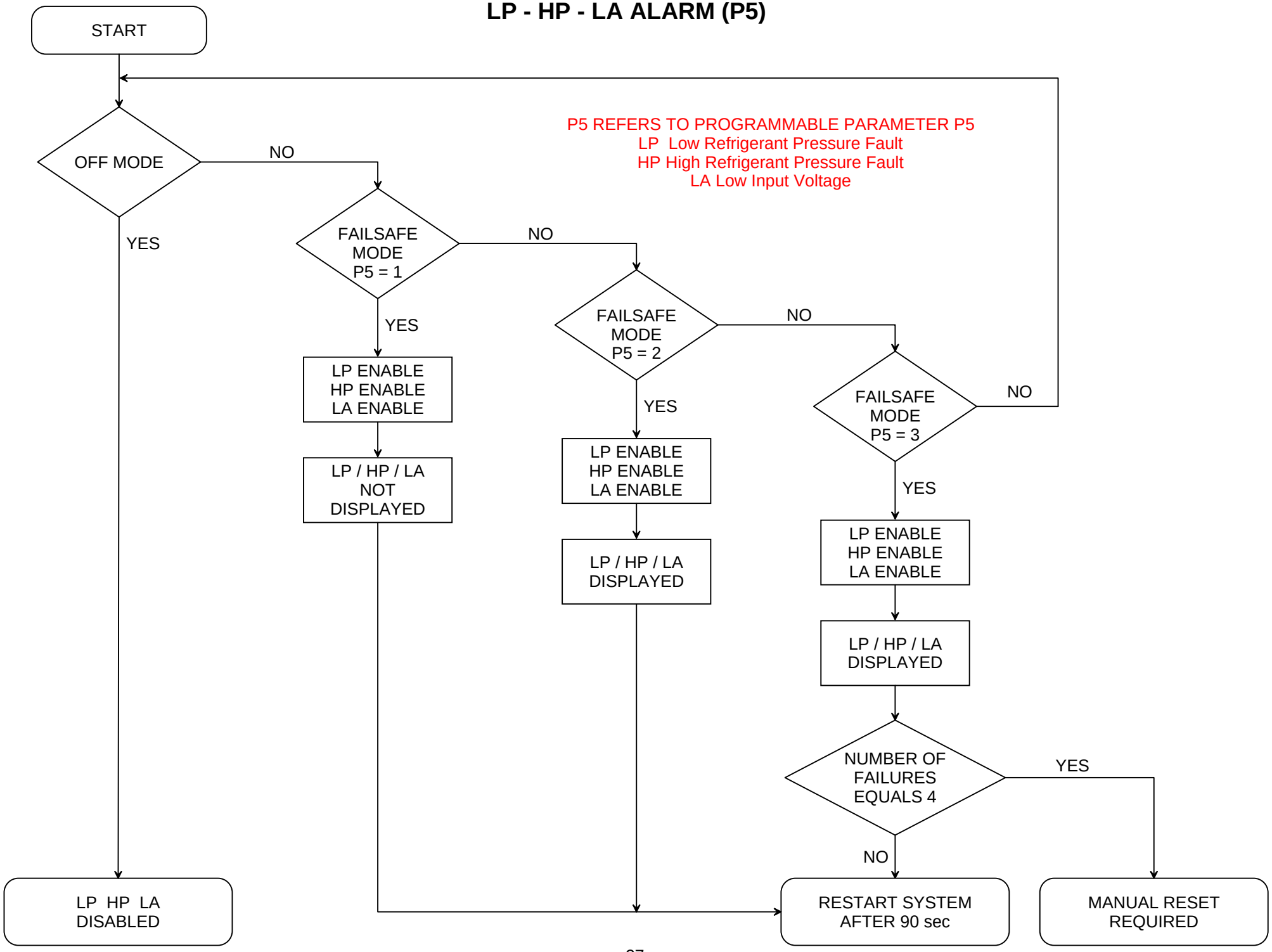

TERMINAL BLOCK - ENLARGED VIEW

1	2	3	4	5	6	7	8	9
Comp	Comp	Pump	Pump L-2	Valve L-1	AC L-1	AC L-2	FAN L-2	FAN L-1

UNIT BLOWER (SHADED POLE IF USED)

UNIT BLOWER (PSC)

FAN MOTOR RUN CAPACITOR

REVERSING VALVE SOLENOID COIL

UNIT POWER INPUT SEE NOTE 1 BELOW

PTCR START ASSIST DEVICE

OVERLOAD

COMPRESSOR

SEAWATER PUMP

RUN CAPACITOR

HIGH REFRIGERANT PRESSURE SWITCH

LOW REFRIGERANT PRESSURE SWITCH

NOTE 1 POWER INPUT			
VOLTAGE	TERMINAL 6	TERMINAL 7	GRND LUG
115	L	N	G ⏚
230	L1	L2	G ⏚

AQUA-AIR MARINE AIR CONDITIONING SYSTEMS

SELF CONTAINED UNIT WIRING WITH SAPPHIRE DIGITAL THERMOSTAT (w/HIGH & LOW PRESSURE SWITCH)

DRAWING NUMBER	DRAWN BY	DATE	SCALE	APPROVED BY	REVISION DATE	REV
4010-03J	SB	08-11-08	NONE	DN		

TERMINAL BLOCK - ENLARGED VIEW

1	2	3	4	5	6	7	8	9
Comp	Comp	Pump	Pump L-2	Valve L-1	AC L-1	AC L-2	FAN L-2	FAN L-1

UNIT BLOWER (SHADED POLE IF USED)

UNIT BLOWER (PSC)

FAN MOTOR RUN CAPACITOR

HIGH REFRIGERANT PRESSURE SWITCH

REVERSING VALVE SOLENOID COIL

UNIT POWER INPUT SEE NOTE 1 BELOW

PTCR START ASSIST DEVICE

OVERLOAD

COMPRESSOR

SEAWATER PUMP

RUN CAPACITOR

HIGH PRESSURE JUMPER

NOTE 1 POWER INPUT

VOLTAGE	TERMINAL 6	TERMINAL 7	GRND LUG
115	L	N	G ⏚
230	L1	L2	G ⏚

AQUA-AIR MARINE AIR CONDITIONING SYSTEMS

SELF CONTAINED UNIT WIRING WITH SAPPHIRE DIGITAL THERMOSTAT (w/HIGH PRESSURE JUMPER)

DRAWING NUMBER	DRAWN BY	DATE	SCALE	APPROVED BY	REVISION DATE	REV
4010-03K	SB	08-11-08	NONE	DN		

TERMINAL BLOCK - ENLARGED VIEW

1	2	3	4	5	6	7	8	9
Comp	Comp	Pump	Pump L-2	Valve L-1	AC L-1	AC L-2	FAN L-2	FAN L-1

FAN COIL UNIT

VOLTAGE SAME AS SYSTEM VOLTAGE

UNIT POWER INPUT SEE NOTE 1 BELOW

REVERSING VALVE SOLENOID COIL

SEAWATER PUMP

VOLTAGE SAME AS SYSTEM VOLTAGE

HIGH REFRIGERANT PRESSURE SWITCH

LOW REFRIGERANT PRESSURE SWITCH

OVERLOAD

START RELAY

COMPRESSOR

START CAPACITOR

RESISTOR

RUN CAPACITOR

NOTE 1 POWER INPUT			
VOLTAGE	TERMINAL 6	TERMINAL 7	GRND LUG
115	L	N	G ⏚
230	L1	L2	G ⏚

AQUA-AIR MARINE AIR CONDITIONING SYSTEMS

CONDENSING UNIT WIRING WITH SAPPHIRE DIGITAL THERMOSTAT (w/HIGH & LOW PRESSURE SWITCH)

DRAWING NUMBER	DRAWN BY	DATE	SCALE	APPROVED BY	REVISION DATE	REV
4009-47D	SB	08-11-08	NONE	DN		

TERMINAL BLOCK - ENLARGED VIEW

1	2	3	4	5	6	7	8	9
Comp	Comp	Pump	Pump L-2	Valve L-1	AC L-1	AC L-2	FAN L-2	FAN L-1

FAN COIL UNIT

VOLTAGE SAME AS SYSTEM VOLTAGE

UNIT POWER INPUT SEE NOTE 1 BELOW

SEAWATER PUMP

VOLTAGE SAME AS SYSTEM VOLTAGE

REVERSING VALVE SOLENOID COIL

HIGH REFRIGERANT PRESSURE SWITCH

OVERLOAD

START RELAY

COMPRESSOR

START CAPACITOR

RESISTOR

RUN CAPACITOR

NOTE 1 POWER INPUT

VOLTAGE	TERMINAL 6	TERMINAL 7	GRND LUG
115	L	N	G ⏚
230	L1	L2	G ⏚

AQUA-AIR MARINE AIR CONDITIONING SYSTEMS

CONDENSING UNIT WIRING WITH SAPPHIRE DIGITAL THERMOSTAT (w/o LOW PRESSURE SWITCH)

DRAWING NUMBER	DRAWN BY	DATE	SCALE	APPROVED BY	REVISION DATE	REV
4009-47E	SB	08-11-08	NONE	DN		

TSV COMPONENT DIMENSIONS

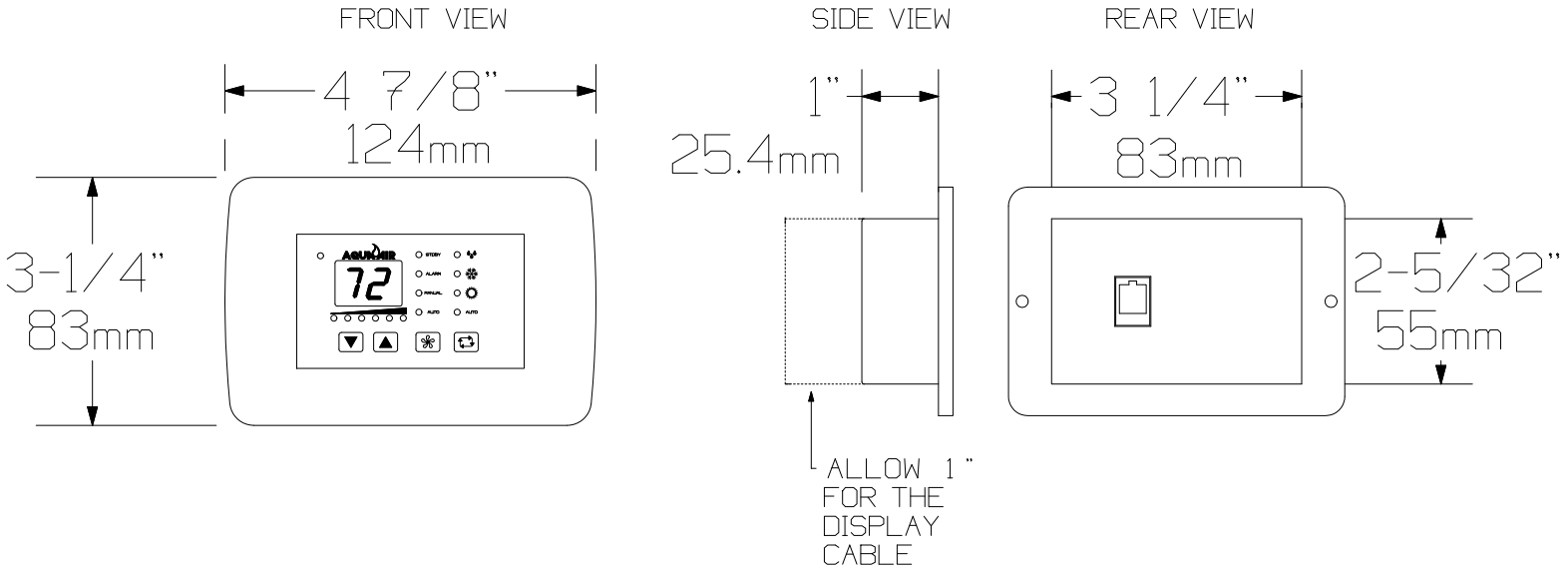

TSV-01 DISPLAY

TSV-02 CONTROL MODULE

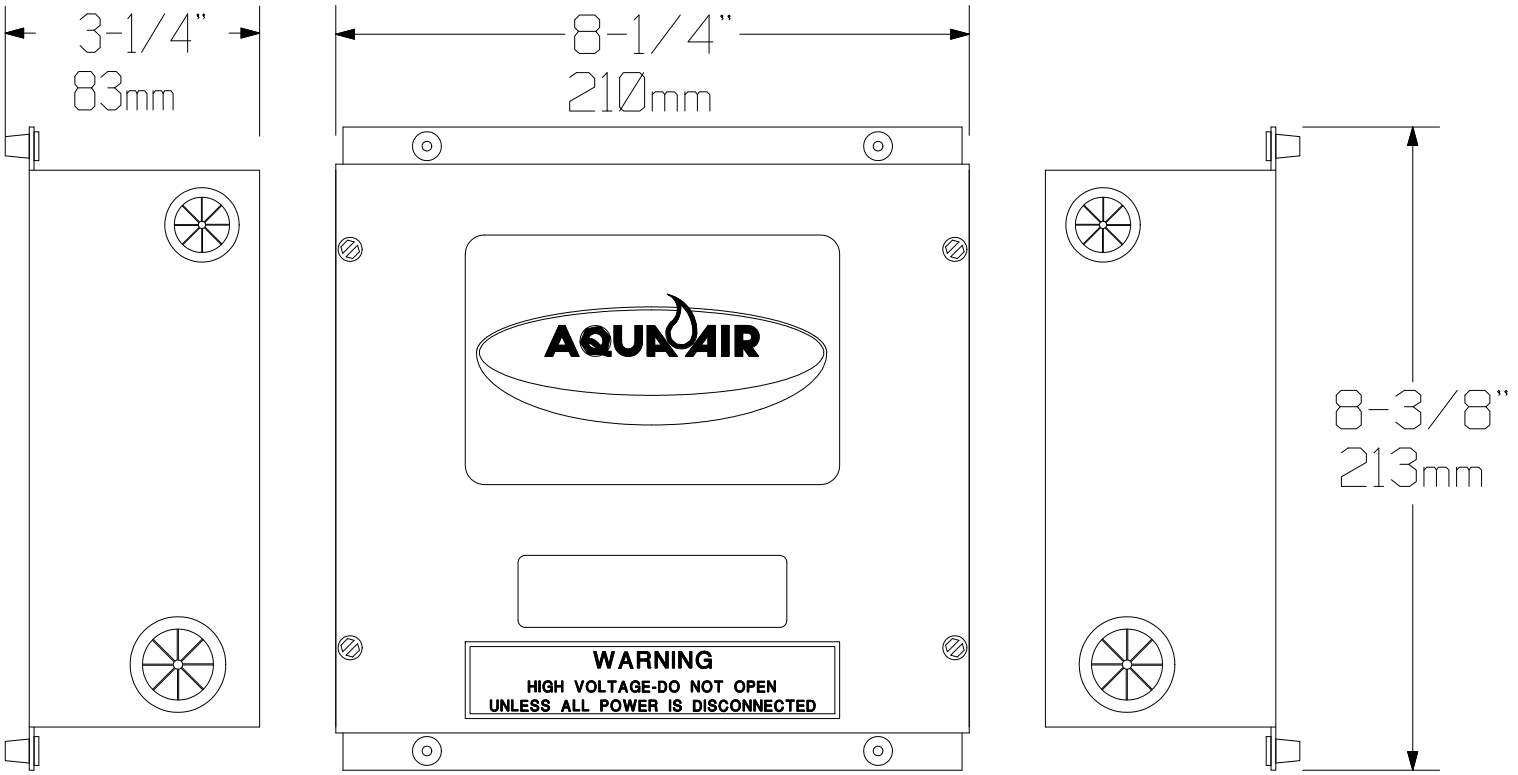

80999-SP.GXD

TWS DIGITAL THERMOSTAT
COMPONENT DIMENSIONS

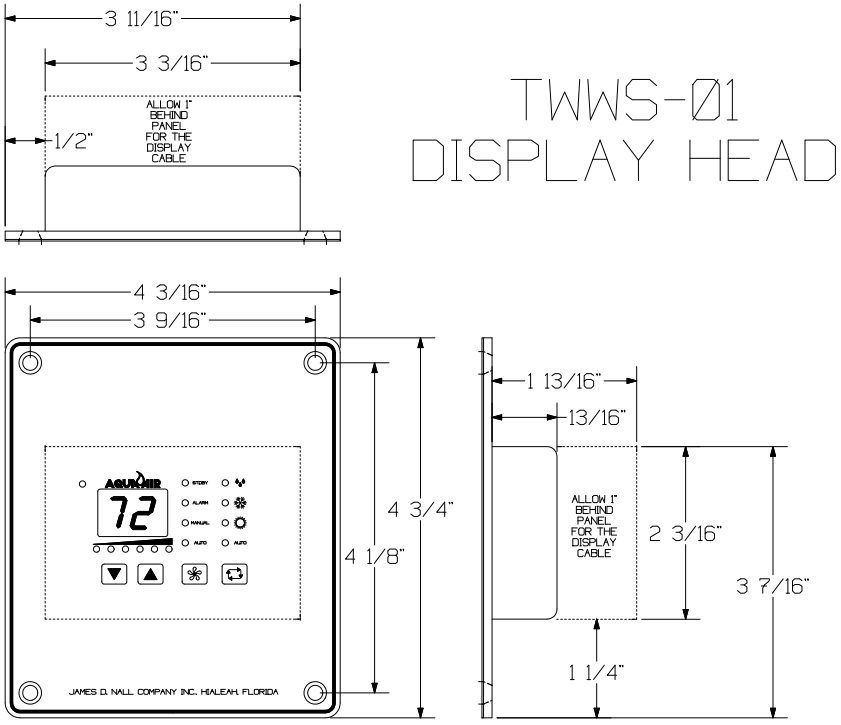

TWWS-01
DISPLAY HEAD

TSV-02 CONTROL MODULE

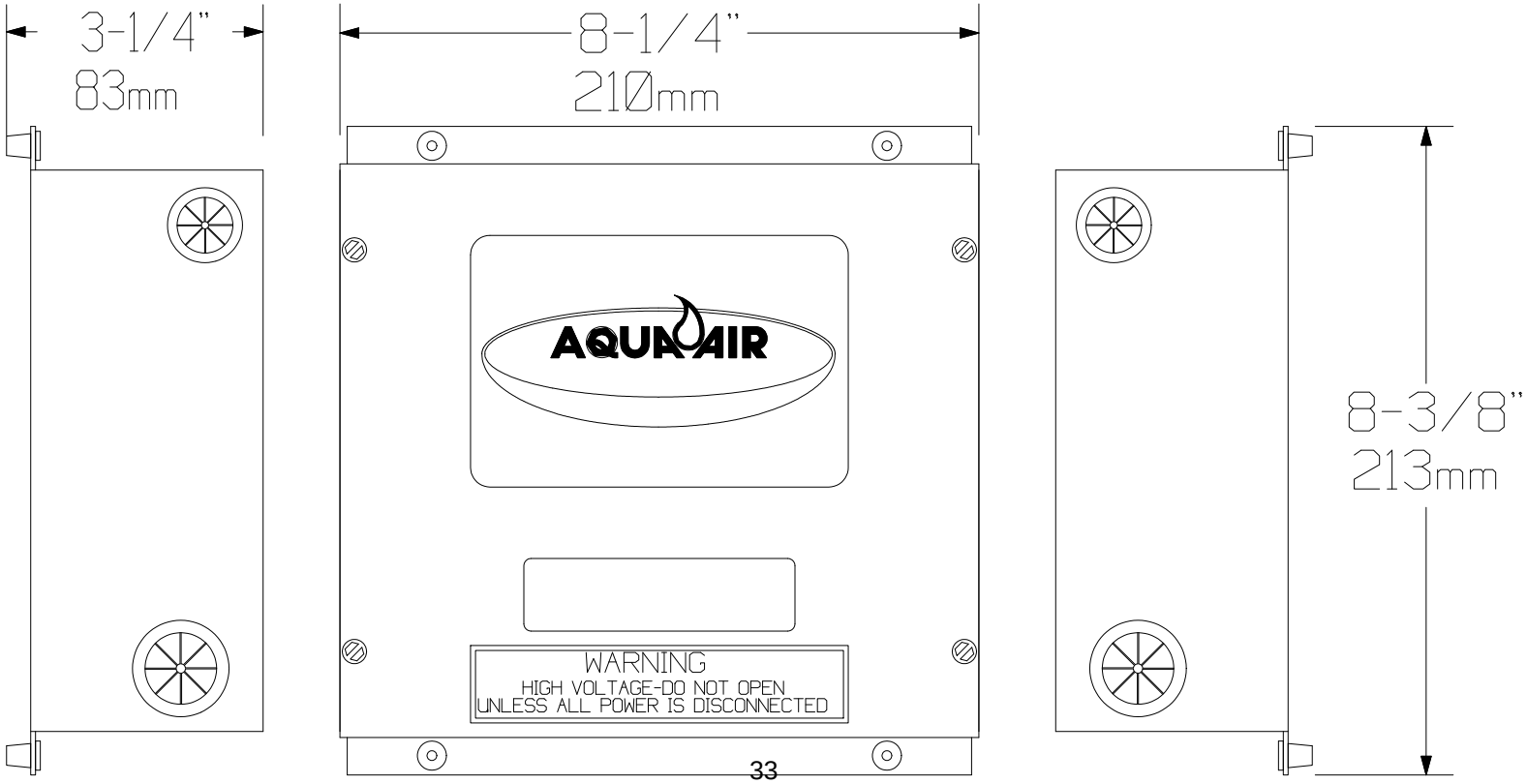

4012-30C.GXD

AQUA AIR
MARINE AIR CONDITIONING SYSTEMS

Vimar Bezels for TSV Thermostats

Standard VIMAR Idea Series Bezels Stocked by Aqua-Air

VB-BLACK
VIMAR 16753-11

VB-CHROME
VIMAR 16753.3**6**

VB-GOLD
VIMAR 16753.32

VB-NICKEL
VIMAR 16753.33

VB-WHITE
VIMAR 16753.01

The Bezel must be ordered in addition to the Sapphire Thermostat

Vimar Bezel before installation
on Sapphire TSV-01 Display Head

Vimar Bezel after installation
on Sapphire TSV-01 Display Head

You can see all of the different Vimar Idea Series Bezels on the Daniel R. Smith & Associates webpage located here.

Aqua-Air Manufacturing
1050 E. 9th St., Hialeah, FL 33010
Phone 305-884-8363 Tollfree 800-328-1043 Fax 305-883-8549
www.aquaair.com sales@aquaair.com

AQUA AIR
MARINE AIR CONDITIONING SYSTEMS

REFRIGERANT LINE SETS LS SERIES

The LS Series Refrigerant Line Sets are utilized in split (sometimes called remote) direct expansion systems to connect the evaporator/fan coil with the condensing unit. Each line set is comprised of an insulated suction and liquid line with either flare or quick connect ends along with an electrical wire (if required).

LS Series line sets are supplied in a minimum length of 10' with longer line sets being available in additional 5' increments.

Example: A line set is required for a 10,000 BTUH condensing unit and evaporator system. The evaporator is located 35' from the condensing unit. The control that will be used is the TW2-01B display head along with the KHT-10 condensing unit. The correct line set configuration is as follows:

1	LS12-3C-10'	10'
5	LS12-3C-5'	25'
	Total line length	35'

The above line set will include a 3/8" insulated suction line (w/ flare nuts on each end), a 1/4" insulated liquid line (w/ flare nuts on each end) and a 14/3 wire for connecting the evaporator fan motor to the TW2 board in the condensing unit electrical box.

LS Series line sets are shipped in a 3' diameter coil.

LS	12	- 3C	- 10'	Model Number Nomenclature	
				Length of Line Set in Feet	
				10'	10' Base line set
				5'	5' Additional length to line set
				Wire Type	
				Blank	No wire supplied
				3C	with 14/3 wire (extends 18" on both ends)
				6C	with 6 conductor wire (extends 18" on both ends)
				Line Sizes	
				12	1/4" liquid, 3/8" suction
				16	1/4" liquid, 1/2" suction
				24	3/8" liquid, 1/2" suction
				36	3/8" liquid, 3/4" suction
				Line Set Series	

i:\wordpfct\80165.wpd

AQUA-AIR MANUFACTURING, division of the James D. Nall Co., Inc.
1050 East 9th Street, Hialeah, Florida 33010 U.S.A.
Ph. 305-884-8363 Fax 305-883-8549 E-mail sales@aquaair.com

LS12-xC-xx' EXAMPLE

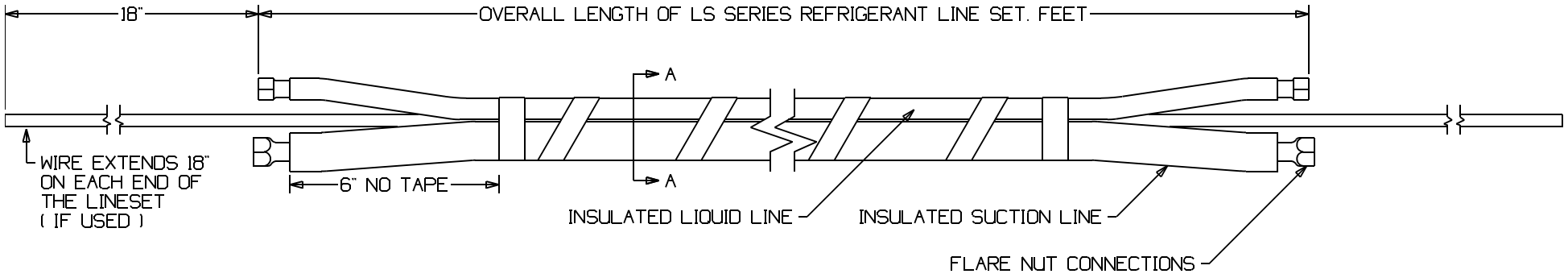

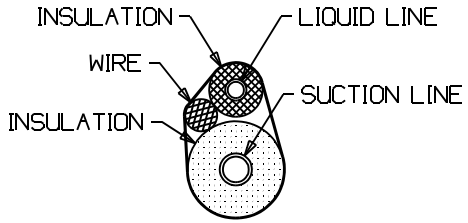

SECTION
A-A
(2x's ACTUAL)

AQUA-AIR MARINE AIR CONDITIONING SYSTEMS

LS SERIES LINE SETS

DRAWING NUMBER	DRAWN BY	DATE
LS-4	DN	3-21-98

SCALE	APPROVED BY	REVISION DATE	REV
N/A			A

AQUA AIR
MARINE AIR CONDITIONING SYSTEMS

GRILLE & DUCT KITS DK SERIES

SINGLE SUPPLY GRILLE & DUCT KIT ECONOMY SERIES

DUCT KIT MODEL NUMBER	USED ON THE FOLLOWING UNITS	SUPPLY GRILLE	TRANSITION BOX w/ RING	RETURN AIR GRILLE	FLEX DUCT INSULATED
AQDK-05	5,000	4" RND DAMP	N/A	RAAL8X8	6' - 4"
DKE-0710S	7,000 and 10,000	PGA12X4R-5B		PG10X10RF	8' - 5"
DKE-1216S	12,000 and 16,000	PGA10X6R-6B		PG12X12RF	8' - 6"
DKE-24S	24,000	PG16X8RF	TB168 HRO7	RAAL14X16	8' - 7"

DUAL SUPPLY GRILLE & DUCT KIT ECONOMY SERIES

DUCT KIT MODEL NUMBER	USED ON THE FOLLOWING UNITS	SUPPLY GRILLE PRIMARY SECONDARY	TRANSITION BOX w/ RING PRIMARY SECONDARY	RETURN AIR GRILLE	BLOWER ADAPTER TEE	FLEX DUCT INSULATED PRIMARY SECONDARY
DKE-0710D	7,000 and 10,000	PGA12X4R-5B		PG10X10RF	AT554	8' - 5"
		PGA5X5R-4B				8' - 4"
DKE-1216D	12,000 and 16,000	PGA10X6R-6B		PG12X12RF	AT664	8' - 6"
		PGA5X5R-4B				8' - 4"
DKE-24D	24,000	2) PGA10X6-6B		RAAL14X16	AT766	16' - 6"

SINGLE SUPPLY GRILLE & DUCT KIT PREMIER SERIES

DUCT KIT MODEL NUMBER	USED ON THE FOLLOWING UNITS	SUPPLY GRILLE	TRANSITION BOX w/ RING	RETURN AIR GRILLE	FLEX DUCT INSULATED
AQDKT-05	5,000	VHT4X4	TB44-4B	RART8X8	6' - 4"
DKP-0710S	7,000 and 10,000	VHT12X4	TB124 / HRO5	RART10X10	8' - 5"
DKP-1216S	12,000 and 16,000	VHT12X6	TB126 / HRO6	RART12X12	8' - 6"
DKP-24S	24,000	VHT20X6	TB206 / HRO7	RART14X16	8' - 7"

DUAL SUPPLY GRILLE & DUCT KIT PREMIER SERIES

DUCT KIT MODEL NUMBER	USED ON THE FOLLOWING UNITS	SUPPLY GRILLE PRIMARY SECONDARY	TRANSITION BOX w/ RING PRIMARY SECONDARY	RETURN AIR GRILLE	BLOWER ADAPTER TEE	FLEX DUCT INSULATED PRIMARY SECONDARY
DKP-0710D	7,000 and 10,000	VHT12X4	TB124 / HRO5	RART10X10	AT554	8' - 5"
		VMLT6X4	TB64 / HRO4			8' - 4"
DKP-1216D	12,000 and 16,000	VHT12X6	TB126 / HRO6	RART12X12	AT664	8' - 6"
		VMLT6X4	TB64 / HRO4			8' - 4"
DKP-24D	24,000	VHT10X6	TB106 / HRO6	RART14X16	AT766	8' - 6"
		VHT10X6	TB106 / HRO6			8' - 6"

SINGLE SUPPLY GRILLE & DUCT KIT COMPONENTS

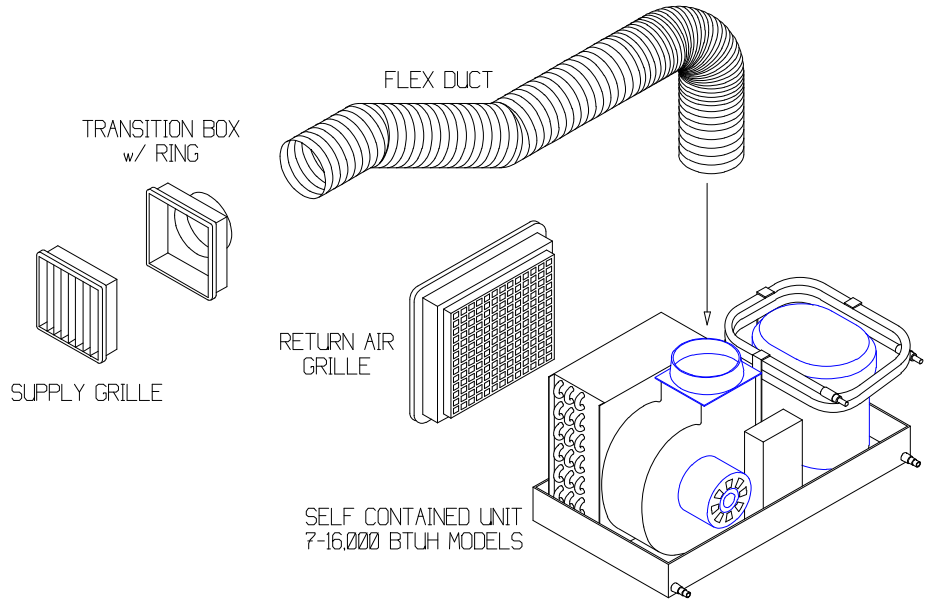

DUAL SUPPLY GRILLE & DUCT KIT COMPONENTS

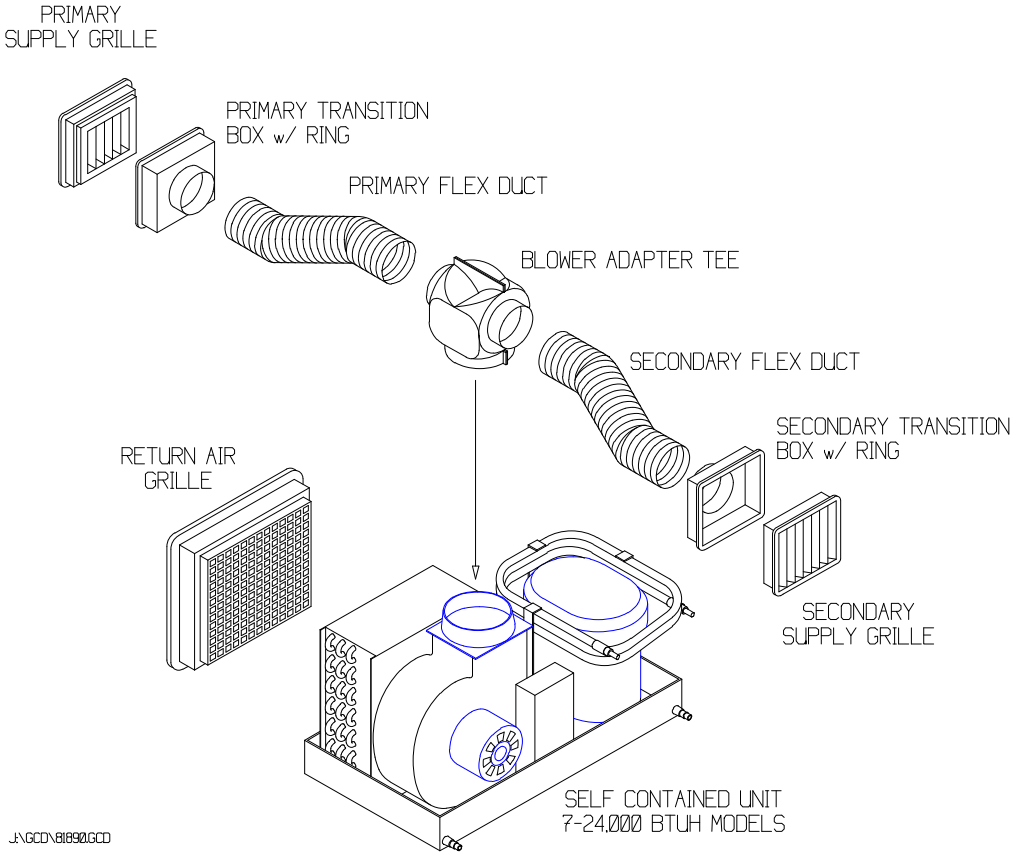

AQUA-AIR MANUFACTURING, division of the James D. Nall Co., Inc.
1050 East 9th Street, Hialeah, Florida 33010 U.S.A.
Ph. 305-884-8363 Fax 305-883-8549 Email sales@aquaair.com

AQUA AIR
MARINE AIR CONDITIONING SYSTEMS

SCIK Self Contained Unit Installation Kits

The SCIK Series Installation Kit provides you with all of the necessary items to install a single Aqua-Air SSIG Series Self Contained Unit. Included in the kit are:

- Seawater Pump
- Seawater Strainer 3/4"
- Speed Scoop Thru Hull 3/4"
- Ball Valve 3/4"
- Water Hose, 5/8"ID x 25'
- Stainless Steel Hose Clamps (17)
- Overboard Fitting
- PVC Fittings for the Pump and Strainer
- Supply Air Grille (SCIK-Plastic, SCIKT-Teak) with Transition Box
- Return Air Grille (SCIK-Plastic, SCIKT-Teak) with Washable Filter
- Insulated Flex Duct, 8' (2.4m) long

Self Contained Unit Size & Voltage	SCIK(T) Installation Kit					
	05	05C	0710	0710C	1216	1216C
05	✔					
05CK		✔				
07			✔			
07C, 07CK				✔		
10			✔			
10C, 10CK				✔		
12					✔	
12C, 12CK						✔
16					✔	
16C, 16CK						✔

Voltage Designations for Self Contained Units: No Letter = 115-1-60 C = 230-1-60 CK = 220-1-50 .

See the following pages for drawings showing the items included with each kit.

Aqua-Air Manufacturing, division of the James D. Nall Co., Inc.
1050 East 9th Street, Hialeah, Florida 33010 U.S.A.
Ph. 305-884-8363 Fax 305-883-8549 E-mail sales@aquaair.com

SCIK(T) GRILLE AND DUCT COMPONENTS

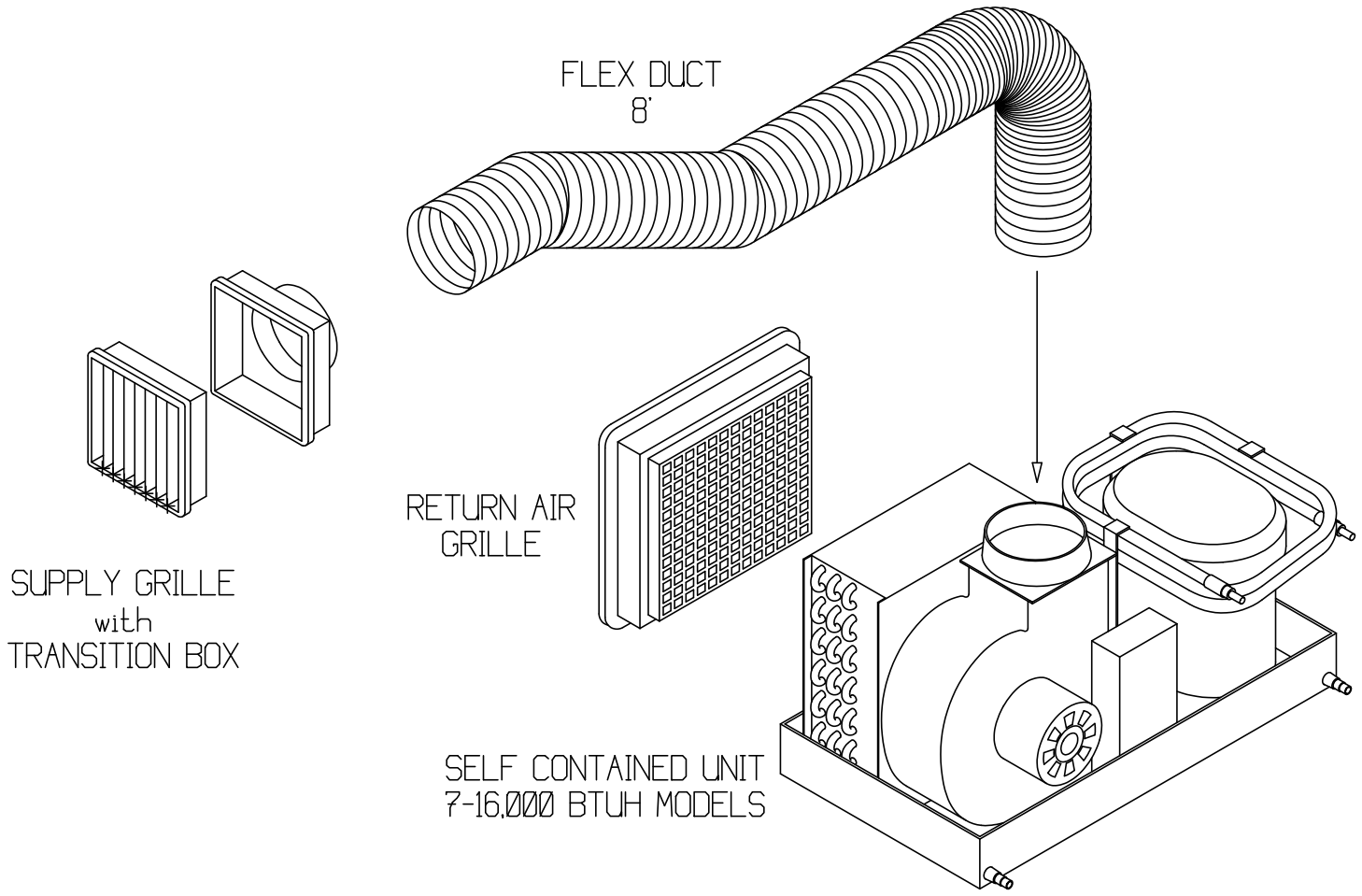

SCIK SERIES KIT	RETURN AIR GRILLE	SUPPLY AIR GRILLE	FLEX DUCT
SCIK-05	PG8X8RF	4" RND DAMP	4"x8'
SCIK-0710	PG10X10RF	PG12X4R-5B	5"x8'
SCIK-1216	PG12X12RF	PG10X6R-6B	6"x8'

SCIKT SERIES KIT	RETURN AIR GRILLE	SUPPLY AIR GRILLE	TRANSITION BOX	FLEX DUCT
SCIKT-05	RART8X8	VHT4X4	TB44-4B	4"x8'
SCIKT-0710	RART10X10	VHT12X4	TB124 & HR05	5"x8'
SCIKT-1216	RART12X12	VHT12X6	TB126 & HR06	6"x8'

DDK(T) DUAL DUCT ADDER

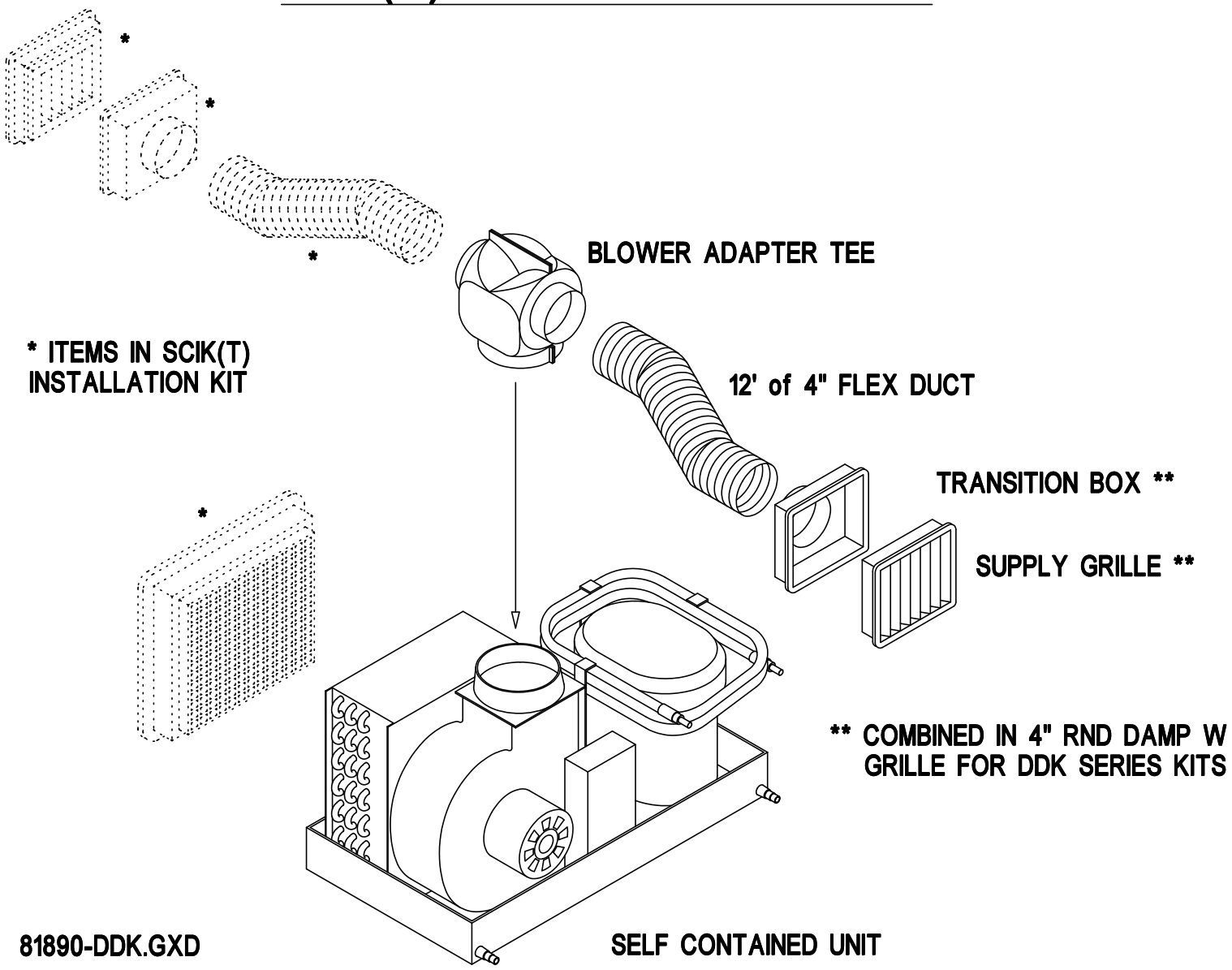

DDK(T) SERIES KIT	SUPPLY AIR GRILLE	TRANSITION BOX	ADAPTER TEE
DDK-0710	4" RND DAMP W	N/A	AT554
DDK-1216	4" RND DAMP W	N/A	AT664
DDKT-0710	VMLT6X4	TB64-4B	AT554
DDKT-1216	VMLT6X4	TB64-4B	AT664

SCIK SEAWATER KIT COMPONENTS

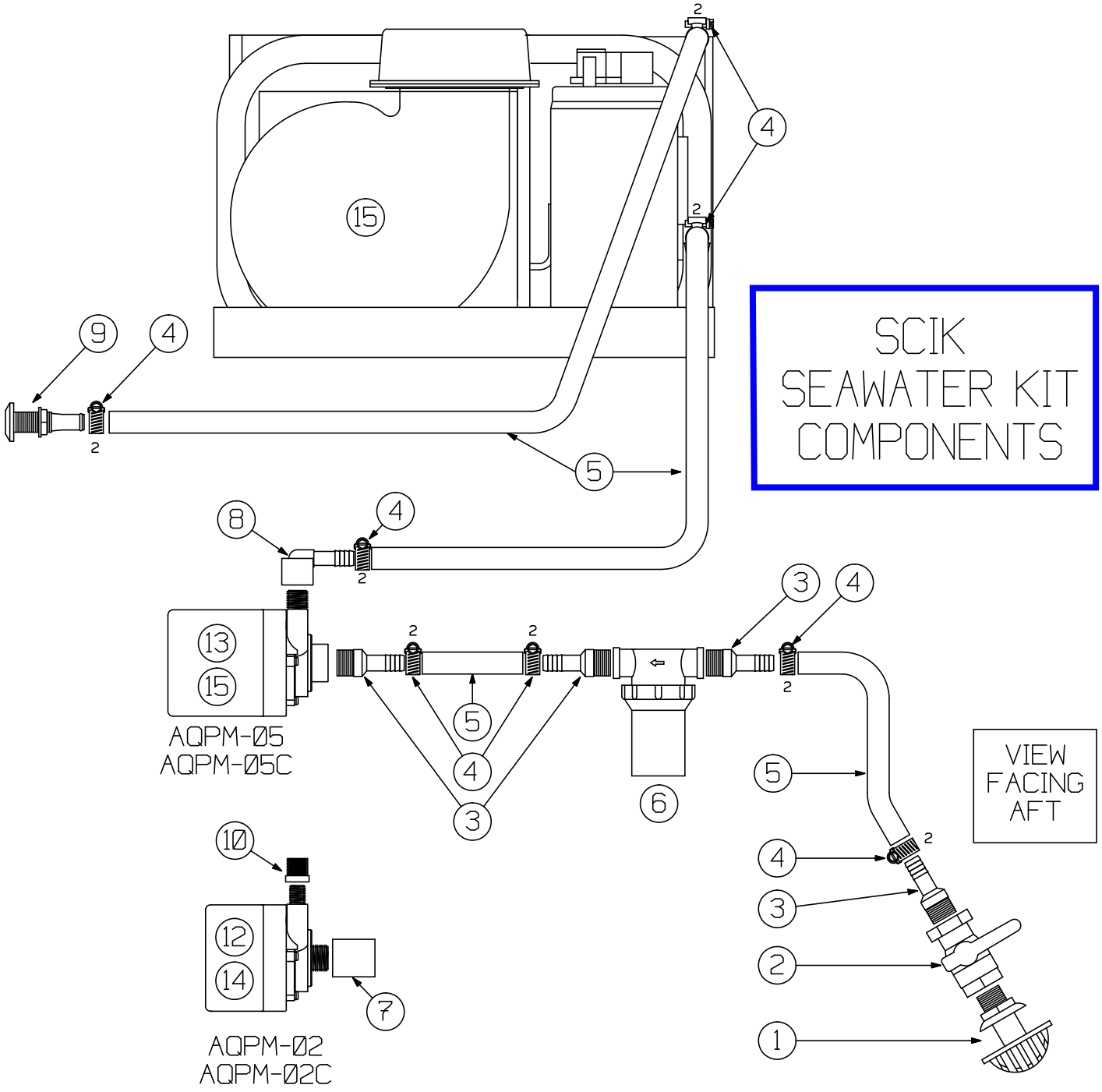

ITEM	DESCRIPTION	PART NUMBER	SCIK-05 QTY	SCIK-05C QTY	SCIK-0710 QTY	SCIK-0710C QTY	SCIK-1216 QTY	SCIK-1216C QTY
1	THRU-HULL 3/4" w/SCOOP	222304-01	1	1	1	1	1	1
2	BALL VALVE 3/4"	223533-07	1	1	1	1	1	1
3	3/4" MPT x 5/8" HOSE	216014-00	4	4	4	4	4	4
4	HOSE CLAMP 1"	204103-00	17	17	17	17	17	17
5	HOSE 5/8" ID	210008-58	25'	25'	25'	25'	25'	25'
6	SEAWATER STRAINER 3/4"	220403-00	1	1	1	1	1	1
7	COUPLING 3/4" FPT	216015-00	1	1	1	1	-	-
8	1/2" FPT x 5/8" HOSE ELL	216013-01	1	1	1	1	1	1
9	OVERBOARD THRU-HULL 5/8"	222301-02	1	1	1	1	1	1
10	ADAPTER 1/2" x 1/4"	216003-12	1	1	1	1	-	-
11	SELF CONTAINED UNIT	SSIG-xx	1	1	1	1	1	1
12	SEAWATER PUMP	AQPM-02	1	-	1	-	-	-
13	SEAWATER PUMP	AQPM-05	-	-	-	-	1	-
14	SEAWATER PUMP	AQPM-02C	-	1	-	1	-	-
15	SEAWATER PUMP	AQPM-05C	-	-	-	-	-	1

AQUAAIR

MARINE AIR CONDITIONING SYSTEMS

Air Distribution Components

Wood Grilles, Plastic Grilles, Grille to Flex Duct Adaptors, Hose Adaptors and Duct

2014

Guidelines and Safety

Consult your system installation manual for the recommended use of air control products. We will be glad to assist you but it is your responsibility to insure proper airflow and safety. Insure that all of our products are secured as necessary to prevent injuries.

It is especially important that the correct size return air grille be used and mounted as close to the system evaporator as possible. It cannot be mounted in such a manner that it would introduce deadly fumes into the living quarters. Short on space? With our almost unlimited number of sizes and special custom shapes in our wood-framed line, you should be able to insure maximum airflow. *Is that drawer a perfect place for the return air grille but you do not want to go through the work of making a stock grille fit? Pull it out, throw it away and give us the cutout dimensions. We will make a grille to fit that space.*

WOOD-FRAMED GRILLES

We offer a great number of size and options in our wood-framed grille line. In order to insure that you get what you want, please make your selections in Steps 1-5.

First Step. *Choose your grille model by code*

Code	Description
RA	Return-Air Grille, with fixed vanes, track and filter
RAR	Return-Air Grille, with our EZ removable fixed vanes, track and optonal filter
V	Supply Grille, Single Deflection (one row of vanes run vertical)
VH	Supply Grille, Double Deflection (two rows of vanes, front one vertical)
VML	Supply Grille, Single Deflection & Damper (one vertical row w/damper row)
WG	Supply Grille, Double Deflection 30 Degree Wedge (two rows of vanes)
WGML	Supply Grille, Single Deflection & Damper 30 Degree Wedge (one row + damper row)

Step 2. *Choose a wood species.* Our most common wood species are listed below with their letter designators. Call us to inquire about other species not listed. We are the only manufacturer of our kind that runs their own molder to insure quality and fast orders.

Price Level	Wood Code	Wood Name	Wood Description
1	A	ASH	American White Ash
1	B	BEECH	American Beech
1	SC	CEDAR	Spanish Cedar
1	H	HICKORY	American Hickory
1	JT	JATOBA	Brazilian Jatoba
1	MK	MAKORE	African Cherry
1	MA	MAPLE	American Soft Maple
1	O	OAK	American White Oak
1	P	POPLAR	American Poplar (Paint Wood)
2	C	CHERRY	American Cherry
2	M	MAHOGANY	Honduran Mahogany
2	T	TEAK	Asian Teak
2	W	WALNUT	American Walnut

Please continue on the next page with steps 3, 4, 5 and 6. Steps 3 and 4 are probably the most important steps as this is where you will specify the dimensions of the grille. The order of the dimensions is particularly important as that will determine the direction of the vanes.

Step 3. *Specify the horizontal dimension of the grille cutout.*

Step 4. *Specify the vertical dimension of the grille cutout.*

In order for us to build the grille you want correctly, you need to specify the horizontal dimension first. As you review the different models you will see the correlation of dimensions to blade direction.

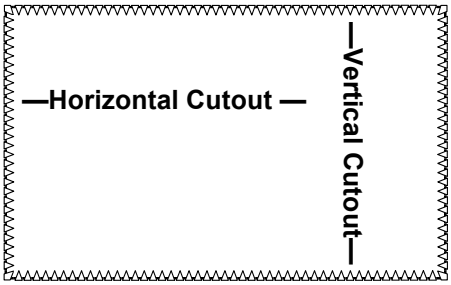

Step 5. *Add any options listed below.*

A. Face Options (Please note face dimension drawing below)

- **F1** 1-1/8" wide face
- **F2** 7/8" wide face (default face, no need to specify)
- **F3** 1/2" wide face (grille cut-out dimensions are critical)
- **F4** Non-faced (use for custom built-in applications)

B. Other Options

- **DF** Delete standard filter
- **RC** Round grille corners (F1 and F2 face only)
- **WB** Replace bronze blades with white
- **KB** Replace bronze blades with black
- **BB** Replace white blades with bronze

Step 6. *Add any finishing options. Other colors are available.*

Standard Painting Options

Paint Colors	Gloss Codes	Flat Codes
Prime Only	**K**	**N/A**
White	**M1**	**M1F**
Antique White	**M2**	**M2F**
Cream	**M3**	**M3F**
Black	**M7**	**M7F**

Stain & Varnish Options

Finish	Codes
Satin Varnish	**SP**
Gloss Varnish	**GP**
Stain & Satin Varnish	**SSP**
Stain & Gloss Varnish	**SGP**

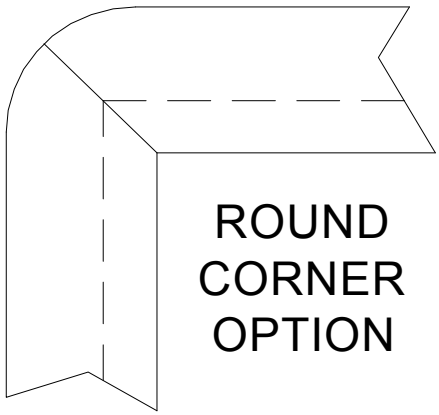

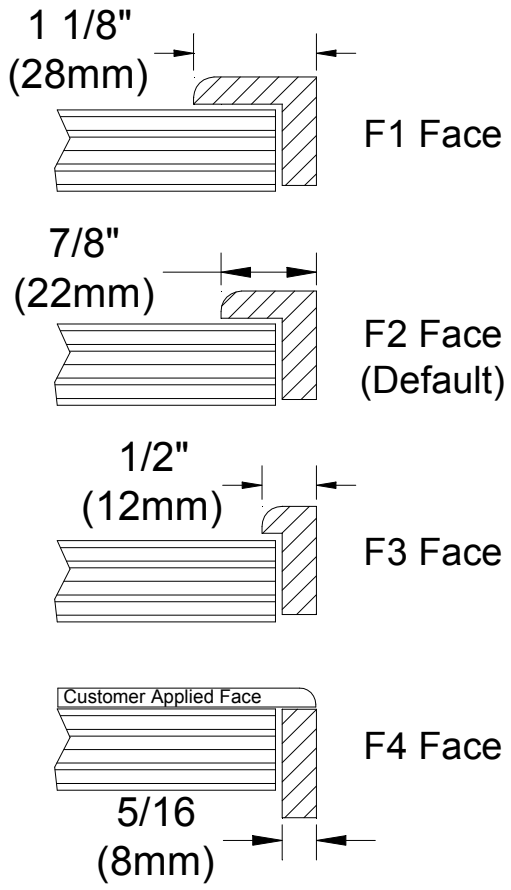

RA & RAR Return Air

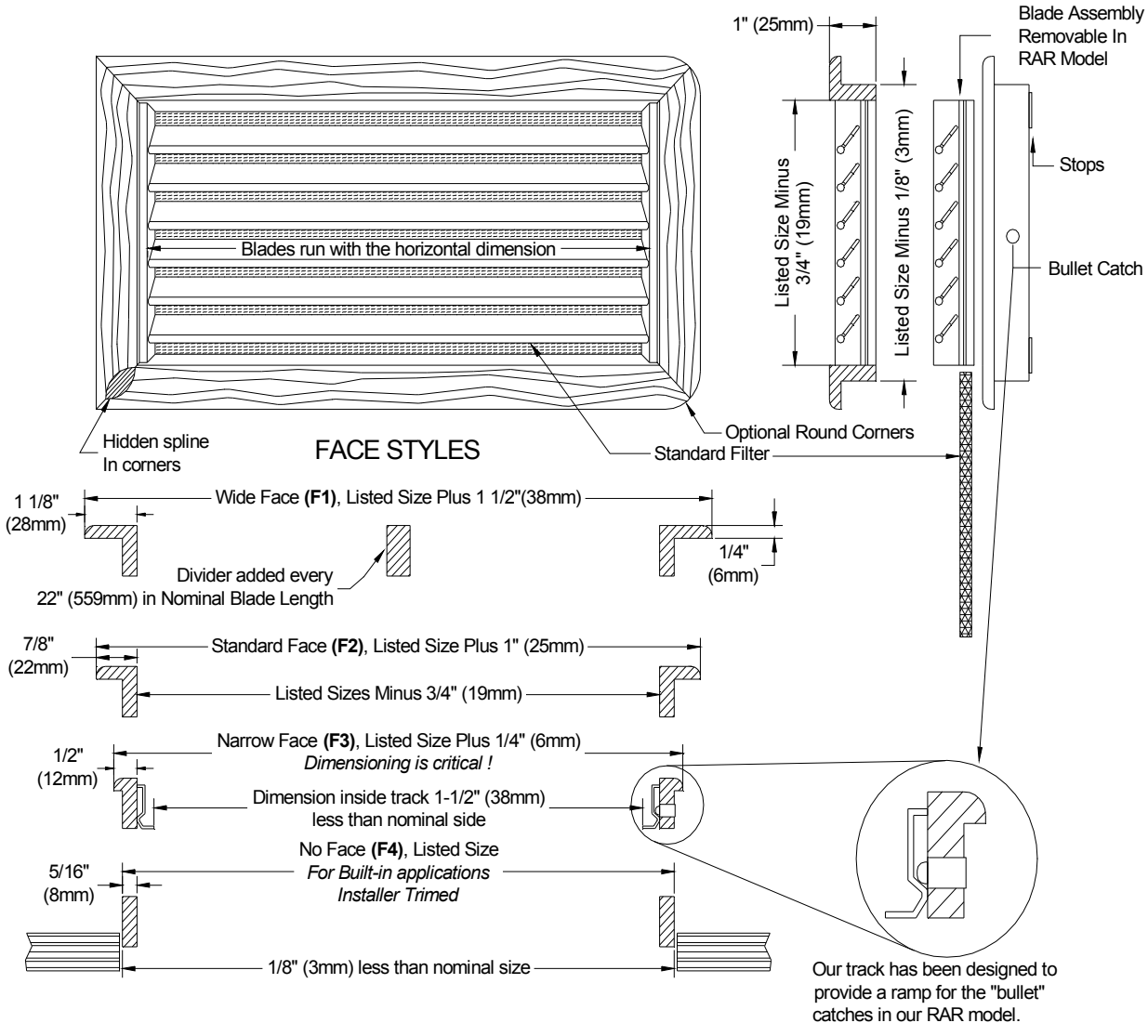

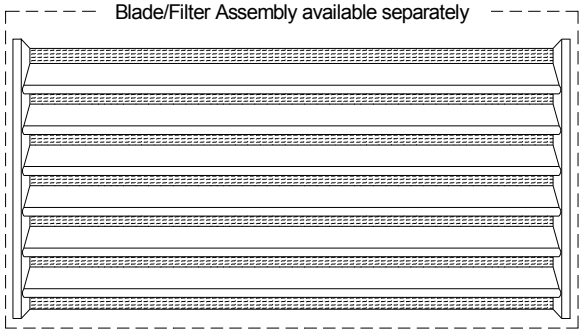

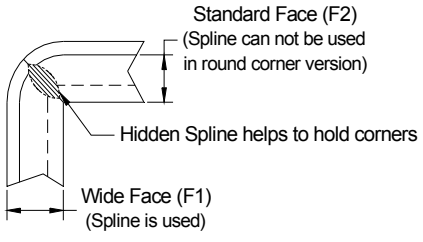

Optional Round Corners

RETURN AIR GRILLE, FIXED INSERT

(Teak Codes shown, blade size in **bold**)
To Specify another Species Change Species Code and Name in Description
(I.e. RA**M**7X7, **Mahogany** Return Air Grille, 7 x 7)
(Our most common sizes listed below, many others available)

ITEM CODE	DESCRIPTION
RAT7X7	Teak Return Air Grille, **7** x 7
RAT8X8	Teak Return Air Grille, **8** x 8
RAT8X10	Teak Return Air Grille, **8** x 10
RAT10X6	Teak Return Air Grille, **10** x 6
RAT10X8	Teak Return Air Grille, **10** x 8
RAT10X10	Teak Return Air Grille, **10** x 10
RAT10X12	Teak Return Air Grille, **10** x 12
RAT10X14	Teak Return Air Grille, **10** x 14
RAT11X8	Teak Return Air Grille, **11** x 8
RAT12X6	Teak Return Air Grille, **12** x 6
RAT12X10	Teak Return Air Grille, **12** x 10
RAT12X12	Teak Return Air Grille, **12** x 12
RAT12X14	Teak Return Air Grille, **12** x 14
RAT14X6	Teak Return Air Grille, **14** x 6
RAT14X7	Teak Return Air Grille, **14** x 7
RAT14X10	Teak Return Air Grille, **14** x 10
RAT14X12	Teak Return Air Grille, **14** x 12
RAT16X6	Teak Return Air Grille, **16** x 6
RAT16X8	Teak Return Air Grille, **16** x 8

EZ RETURN AIR GRILLE, EZ ACCESS INSERT

(Teak Codes shown, blade size in **bold**)
To Specify Another Species Change Species Code and Name in Description
(I.e. RAR**M**7X7, **Mahogany** EZ Return Air Grille, 7 x 7)

(Our most common sizes listed below, many others available)

ITEM CODE	DESCRIPTION
RART7X7	Teak EZ Return Air Grille, **7** x 7
RART8X8	Teak EZ Return Air Grille, **8** x 8
RART8X10	Teak EZ Return Air Grille, **8** x 10
RART10X6	Teak EZ Return Air Grille, **10** x 6
RART10X8	Teak EZ Return Air Grille, **10** x 8
RART10X10	Teak EZ Return Air Grille, **10** x 10
RART10X12	Teak EZ Return Air Grille, **10** x 12
RART10X14	Teak EZ Return Air Grille, **10** x 14
RART11X8	Teak EZ Return Air Grille, **11** x 8
RART12X6	Teak EZ Return Air Grille, **12** x 6
RART12X10	Teak EZ Return Air Grille, **12** x 10
RART12X12	Teak EZ Return Air Grille, **12** x 12
RART12X14	Teak EZ Return Air Grille, **12** x 14
RART14X6	Teak EZ Return Air Grille, **14** x 6
RART14X7	Teak EZ Return Air Grille, **14** x 7
RART14X10	Teak EZ Return Air Grille, **14** x 10
RART14X12	Teak EZ Return Air Grille, **14** x 12

V or H, 2-Way Supply

Representative of a Model "V"

(Blades run vertical to the horizontal dimension)

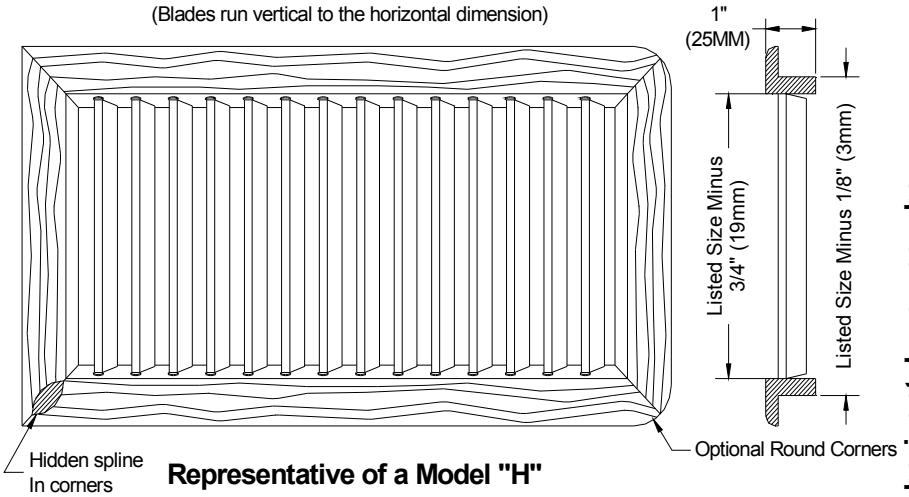

Representative of a Model "H"

(Blades run horizontal with the horizontal dimension)

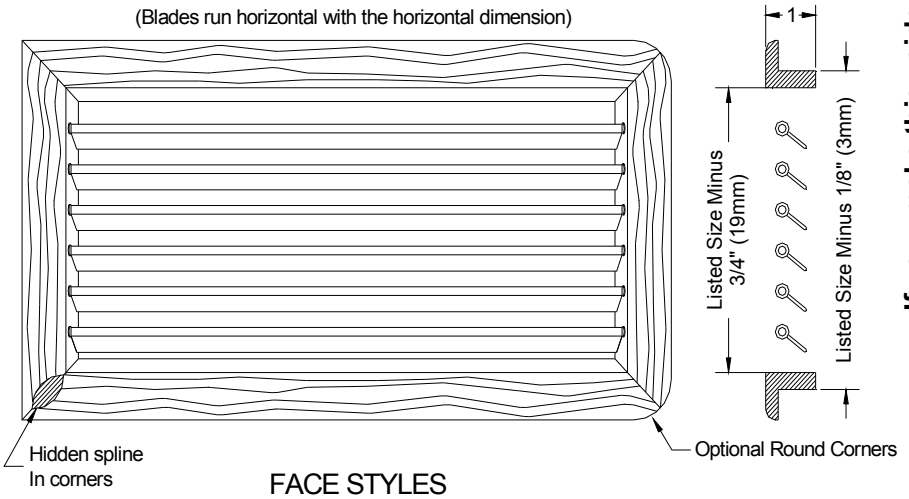

If you make this side horizontal you now have A Model "H"

A Model "V"

FACE STYLES

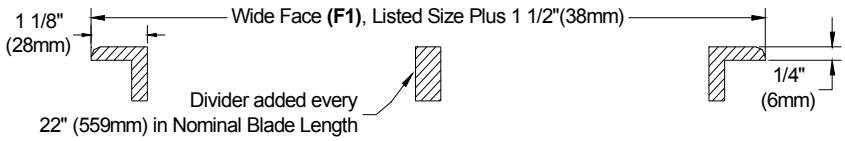

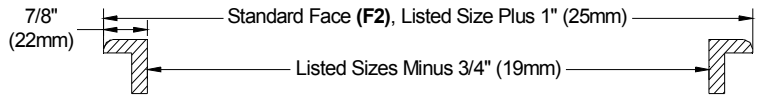

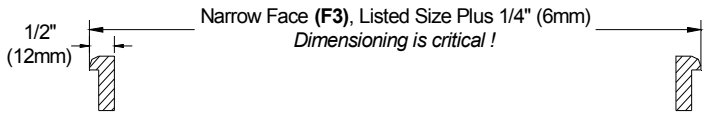

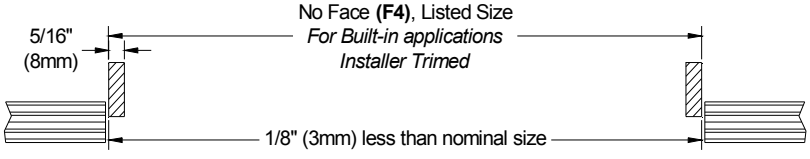

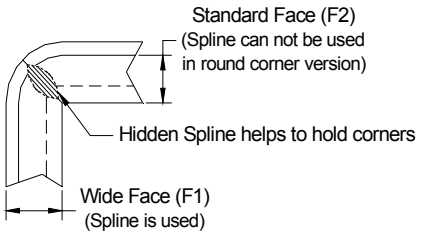

Optional Round Corners

SUPPLY GRILLE, 2 WAY

(Teak Codes shown, blade size in **bold**)
To Specify Another Species Change Species Code and Name in Description
(I.e. V**M**4X4, **Mahogany** 2 Way Supply Grille, 4x4)

(Our most common sizes listed, many others available)

ITEM CODE	DESCRIPTION
VT4X4	Teak 2 Way Supply Grille, 4x**4**
VT6X4	Teak 2 Way Supply Grille, 6x**4**
VT8X4	Teak 2 Way Supply Grille, 8x**4**
VT10X4	Teak 2 Way Supply Grille, 10x**4**
VT12X4	Teak 2 Way Supply Grille, 12x**4**
VT14X4	Teak 2 Way Supply Grille, 14x**4**
VT16X4	Teak 2 Way Supply Grille, 16x**4**
VT20X4	Teak 2 Way Supply Grille, 20x**4**
VT10X5	Teak 2 Way Supply Grille, 10x**5**
VT12X5	Teak 2 Way Supply Grille, 12x**5**
VT14X5	Teak 2 Way Supply Grille, 14x**5**
VT6X6	Teak 2 Way Supply Grille, 6x**6**
VT8X6	Teak 2 Way Supply Grille, 8x**6**
VT10X6	Teak 2 Way Supply Grille, 10x**6**
VT12X6	Teak 2 Way Supply Grille, 12x**6**
VT14X6	Teak 2 Way Supply Grille, 14x**6**
VT7X7	Teak 2 Way Supply Grille, 7x**7**
VT4X8	Teak 2 Way Supply Grille, 4x**8**
VT8X8	Teak 2 Way Supply Grille, 8x**8**
VT10X8	Teak 2 Way Supply Grille, 10x**8**

Did you know? The V grille is the same depth as the RA and RAR grilles. Use this grille when you are short on depth.

VH or HV, 4-Way Supply

Representation of a Model VH

(Front blades run vertical to the horizontal dimension)
(Back blades run horizontal with the horizontal dimension)

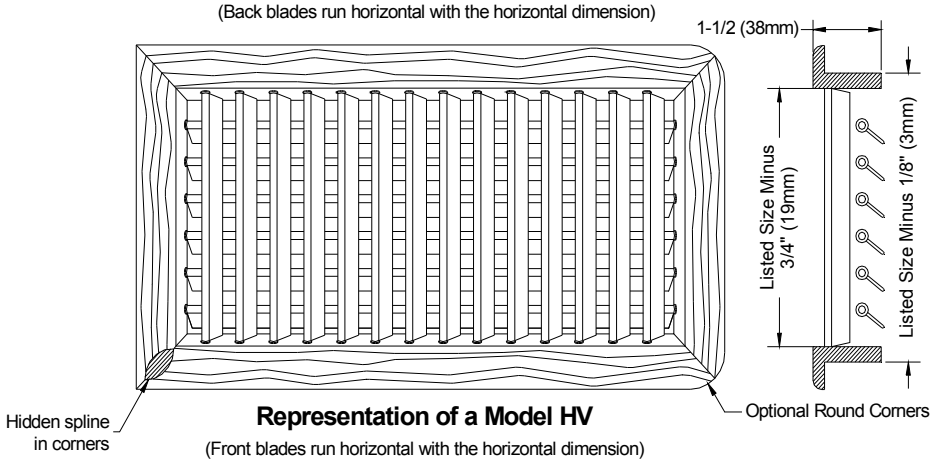

Representation of a Model HV

(Front blades run horizontal with the horizontal dimension)
(Back blades run vertical to the horizontal dimension)

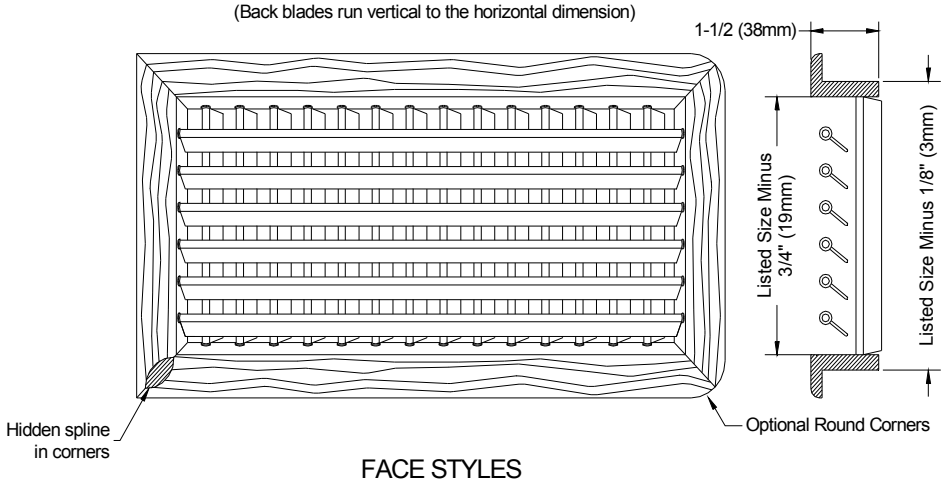

If you make this side horizontal you now have A Model HV

A Model VH

FACE STYLES

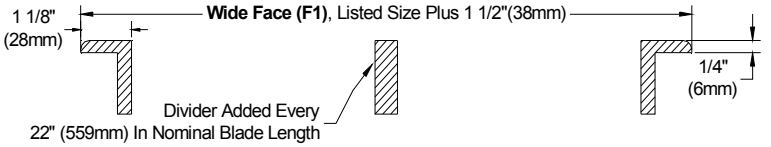

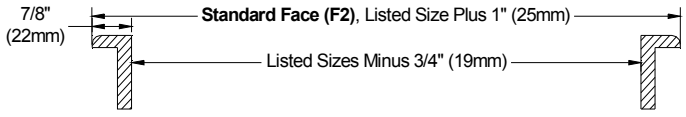

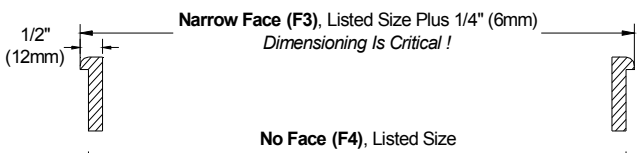

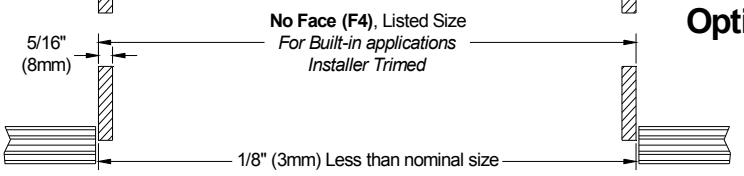

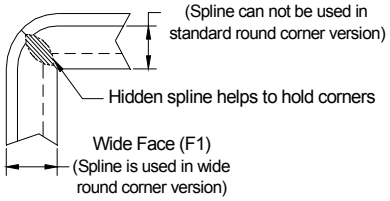

Optional Round Corners

TEAK SUPPLY GRILLE, 4 WAY

(Our most common sizes, many others available)
(Teak Codes shown, blade size in **bold**)
To Specify Another Species Change Species Code and Name in Description
(I.e. VH**M**4X4, **Mahogany** 4 Way Supply Grille, 4x4)

ITEM CODE	DESCRIPTION
VHT4X4	Teak 4 Way Supply Grille, 4x**4**
VHT6X4	Teak 4 Way Supply Grille, 6x**4**
VHT8X4	Teak 4 Way Supply Grille, 8x**4**
VHT10X4	Teak 4 Way Supply Grille, 10x**4**
VHT12X4	Teak 4 Way Supply Grille, 12x**4**
VHT14X4	Teak 4 Way Supply Grille, 14x**4**
VHT16X4	Teak 4 Way Supply Grille, 16x**4**
VHT20X4	Teak 4 Way Supply Grille, 20x**4**
VHT10X5	Teak 4 Way Supply Grille, 10x**5**
VHT12X5	Teak 4 Way Supply Grille, 12x**5**
VHT14X5	Teak 4 Way Supply Grille, 14x**5**
VHT6X6	Teak 4 Way Supply Grille, 6x**6**
VHT8X6	Teak 4 Way Supply Grille, 8x**6**
VHT10X6	Teak 4 Way Supply Grille, 10x**6**
VHT12X6	Teak 4 Way Supply Grille, 12x**6**
VHT14X6	Teak 4 Way Supply Grille, 14x**6**
VHT7X7	Teak 4 Way Supply Grille, 7x**7**
VHT4X8	Teak 4 Way Supply Grille, 4x**8**
VHT8X8	Teak 4 Way Supply Grille, 8x**8**
VHT10X8	Teak 4 Way Supply Grille, 10x**8**

Did you know? The last blade that the air hits does the most amount of work. Keep that in mind when you are designing your air control system.

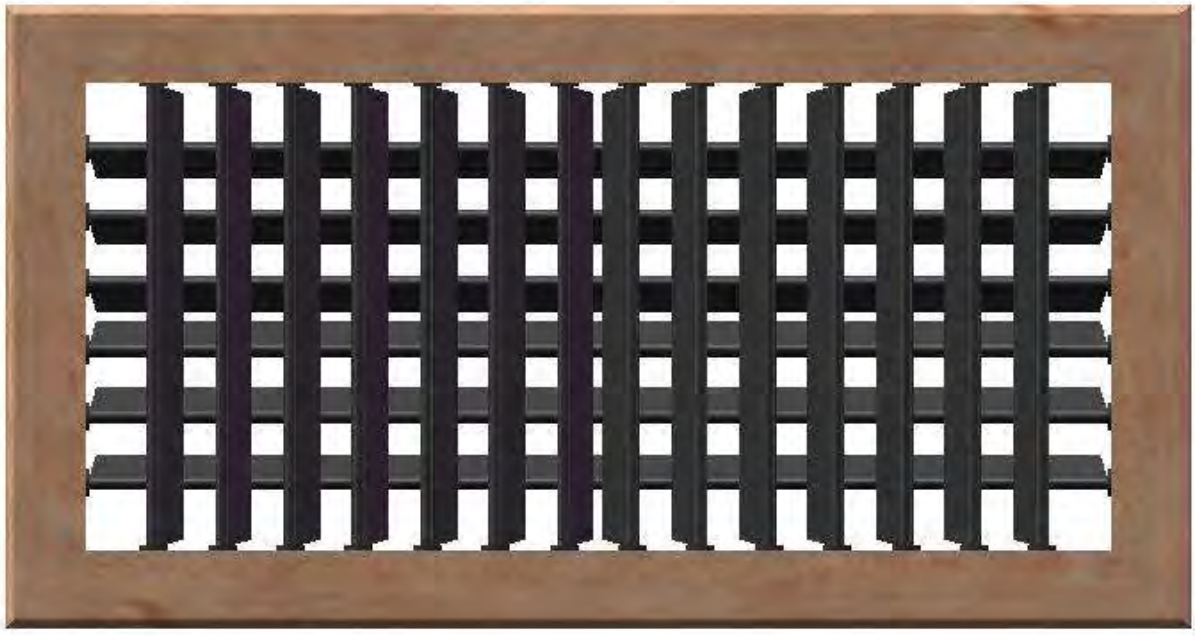

VML, 2-Way Supply W/Damper

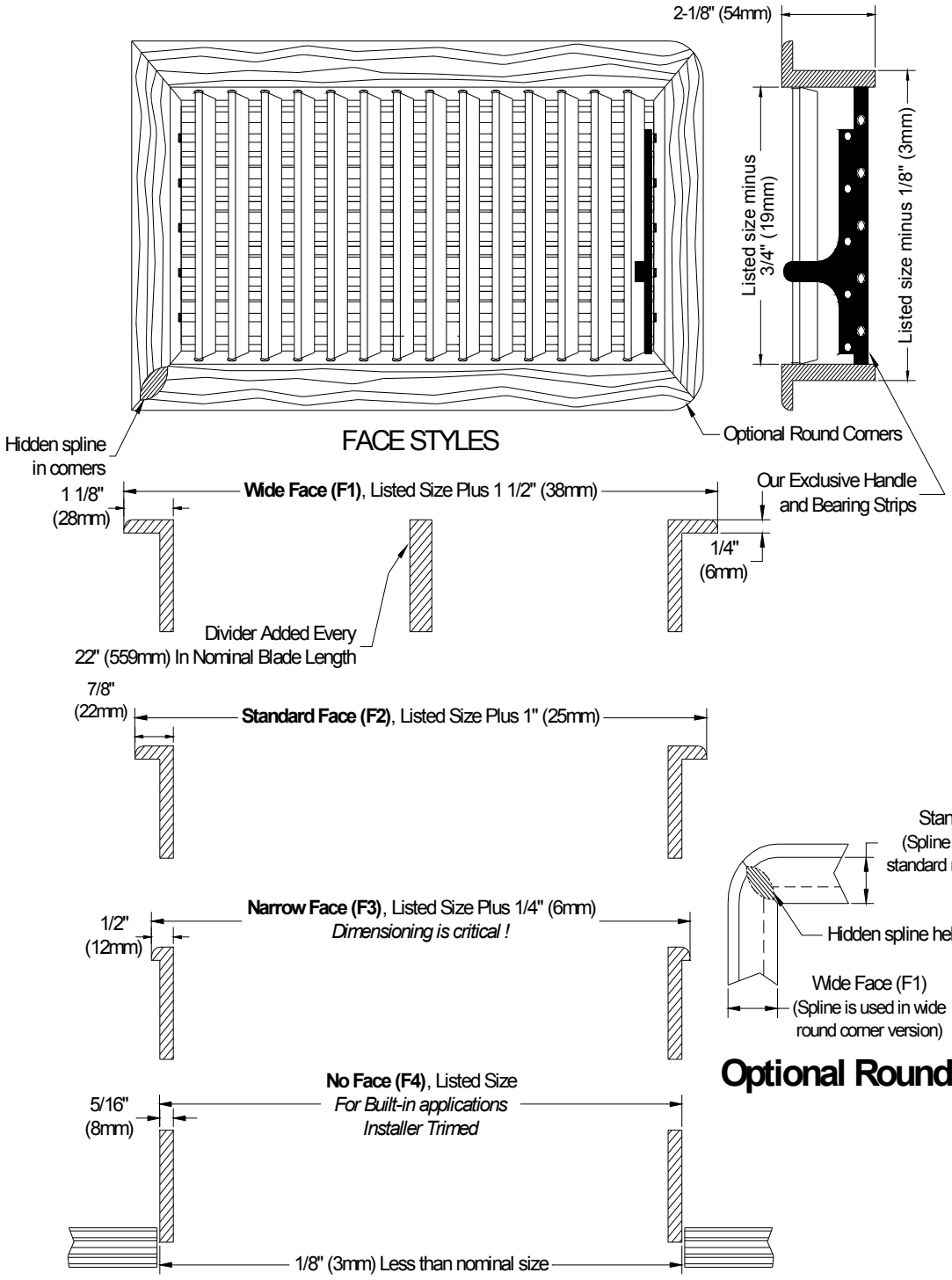

Optional Round Corners

SUPPLY GRILLE, 2 WAY W/DAMPER

(Our most common sizes, many others available)
(Teak Codes shown, front blade size in **bold**)
To Specify Another Species Change Species Code and Name in Description
(I.e. VML**M**6X3, **Mahogany** 2 Way Supply w/Damper, 6x3)

ITEM CODE	DESCRIPTION
VMLT6X3	Teak 2 Way Supply Grille w/ Damper, 6x**3**
VMLT15X3	Teak 2 Way Supply Grille w/ Damper, 15x**3**
VMLT4X4	Teak 2 Way Supply Grille w/ Damper, 4x**4**
VMLT6X4	Teak 2 Way Supply Grille w/ Damper, 6x**4**
VMLT8X4	Teak 2 Way Supply Grille w/ Damper, 8x**4**
VMLT10X4	Teak 2 Way Supply Grille w/ Damper, 10x**4**
VMLT10X5	Teak 2 Way Supply Grille w/ Damper, 10x**5**
VMLT12X5	Teak 2 Way Supply Grille w/ Damper, 12x**5**
VMLT6X6	Teak 2 Way Supply Grille w/ Damper, 6x**6**
VMLT8X6	Teak 2 Way Supply Grille w/ Damper, 8x**6**
VMLT10X6	Teak 2 Way Supply Grille w/ Damper, 10x**6**
VMLT12X6	Teak 2 Way Supply Grille w/ Damper, 12x**6**
VMLT14X6	Teak 2 Way Supply Grille w/ Damper, 14x**6**
VMLT4X8	Teak 2 Way Supply Grille w/ Damper, 4x**8**
VMLT8X8	Teak 2 Way Supply Grille w/ Damper, 8x**8**
VMLT10X8	Teak 2 Way Supply Grille w/ Damper, 10x**8**
VMLT8X10	Teak 2 Way Supply Grille w/ Damper, 8x**10**

Did you know? You can order these grilles in fraction sizes but please note that if the second number is a fraction there will be a space on either side of the damper blades when fully closed.

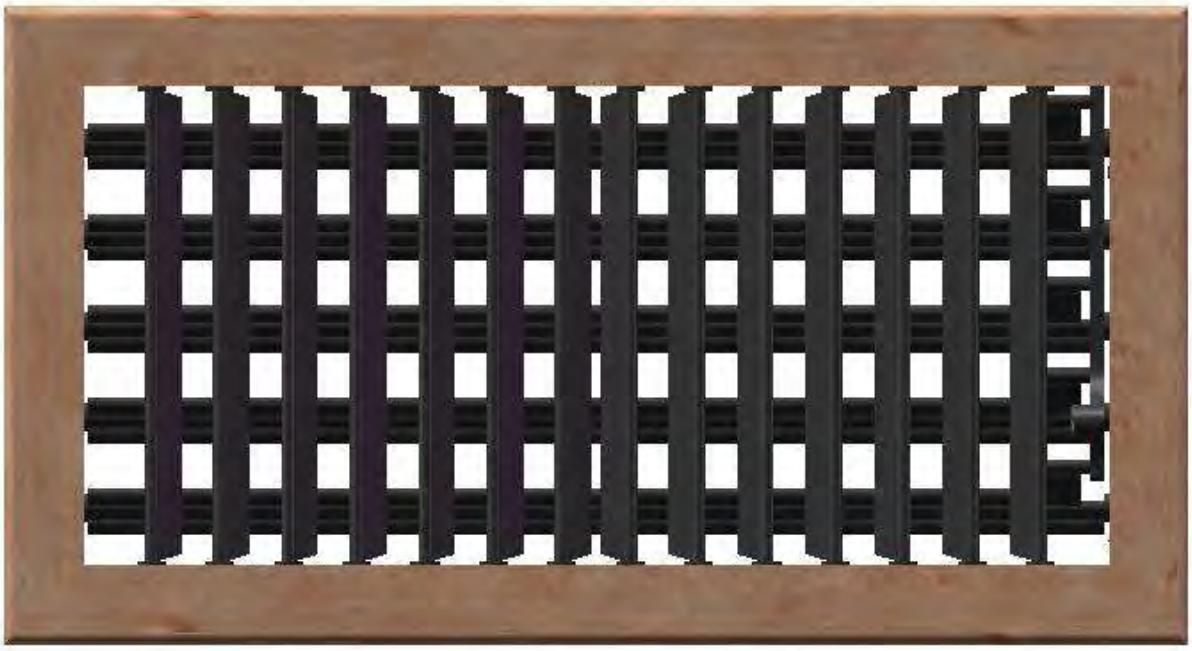

WG - 30 Degree 4 Way Supply Wedge
WGML - 30 Degree 2 Way Supply Wedge W/Damper

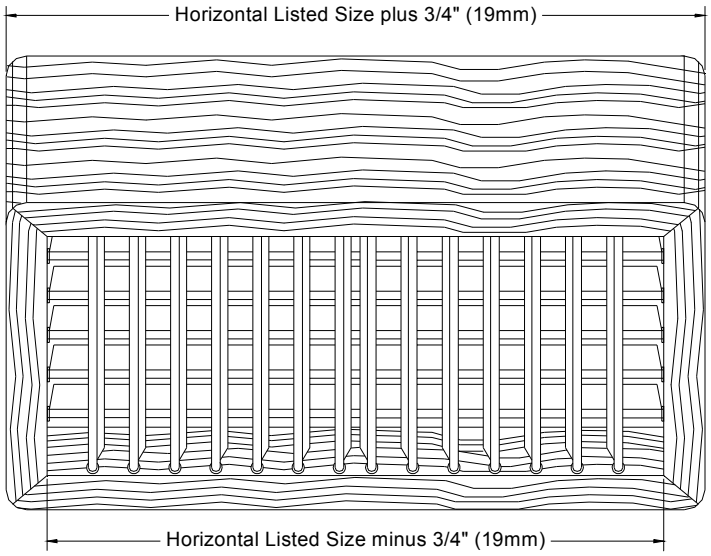

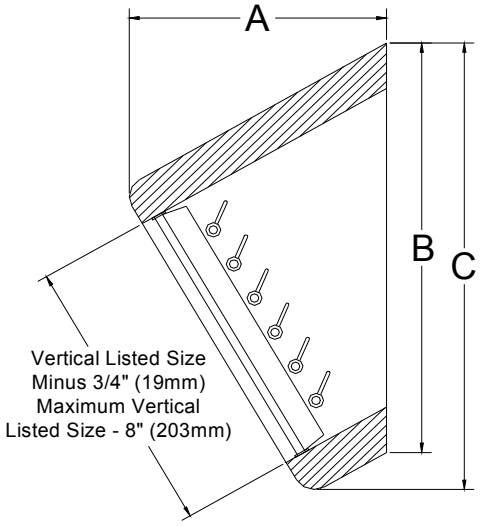

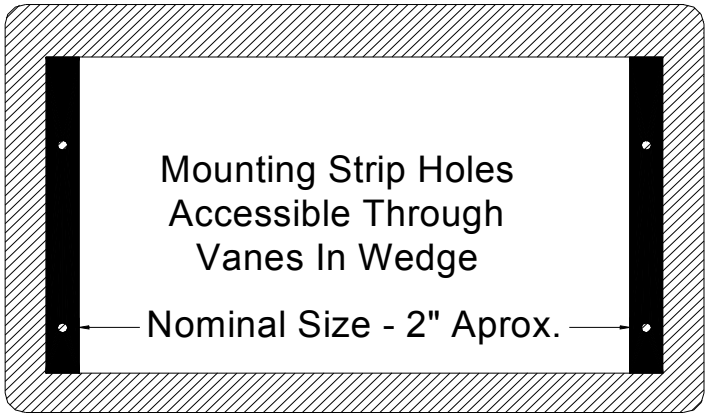

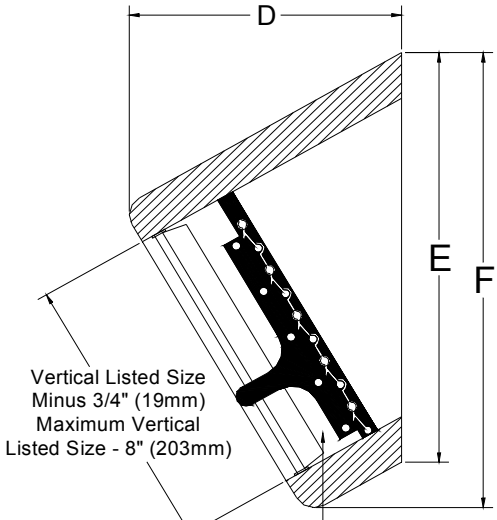

The WGML Uses Our Exclusive Handle and Bearing Strips

Wedge Dimensions for Nominal Listed Depth (Varies Some)

NOM	A	B	C	D	E	F
4	3-5/8	5-1/2	6-1/8	4-1/2	5-1/2	6-1/2
5	4-1/8	6-5/8	7-1/4	4-3/4	6-5/8	7-3/4
6	4-5/8	7-3/4	8-3/8	5-3/8	7-3/4	9
7	5-1/8	9	9-3/4	6	9	10-1/4
8	5-5/8	10-1/8	10-3/4	7-5/8	10-1/8	11-1/2

WG - 30 DEGREE 4 Way Supply Wedge
WGML – 30 Degree 2 Way W/Damper Supply Wedge

(Our most common sizes, others available)
(Teak Codes shown, front blade size in **bold**)
To Specify Another Species Change Species Code and Name in Description
(I.e. WG**M**4X4, **Mahogany** Wedge Supply Grille, 4x4)

ITEM CODE	DESCRIPTION (WG)
WGT4X4	Teak Wedge Supply Grille, 4x**4**
WGT6X4	Teak Wedge Supply Grille, 6x**4**
WGT8X4	Teak Wedge Supply Grille, 8x**4**
WGT10X4	Teak Wedge Supply Grille, 10x**4**
WGT12X4	Teak Wedge Supply Grille, 12x**4**
WGT8X5	Teak Wedge Supply Grille, 8x**5**
WGT10X5	Teak Wedge Supply Grille, 10x**5**
WGT12X5	Teak Wedge Supply Grille, 12x5
WGT14X5	Teak Wedge Supply Grille, 14x**5**
WGT8X6	Teak Wedge Supply Grille, 8x**6**
WGT10X6	Teak Wedge Supply Grille, 10x**6**
WGT12X6	Teak Wedge Supply Grille, 12x**6**
WGT7X7	Teak Wedge Supply Grille, 7x**7**
WGT10X7	Teak Wedge Supply Grille, 10x**7**

ITEM CODE	DESCRIPTION (WGML)
WGMLT4X4	Teak Damper Wedge Supply Grille, 4x**4**
WGMLT6X4	Teak Damper Wedge Supply Grille, 6x**4**
WGMLT8X4	Teak Damper Wedge Supply Grille, 8x**4**
WGMLT10X4	Teak Damper Wedge Supply Grille, 10x**4**
WGMLT12X4	Teak Damper Wedge Supply Grille, 12x**4**
WGMLT8X5	Teak Damper Wedge Supply Grille, 8x**5**
WGMLT10X5	Teak Damper Wedge Supply Grille, 10x**5**
WGMLT12X5	Teak Damper Wedge Supply Grille, 12x5
WGMLT14X5	Teak Damper Wedge Supply Grille, 14x**5**
WGMLT8X6	Teak Damper Wedge Supply Grille, 8x**6**
WGMLT10X6	Teak Damper Wedge Supply Grille, 10x**6**
WGMLT12X6	Teak Damper Wedge Supply Grille, 12x**6**
WGMLT7X7	Teak Damper Wedge Supply Grille, 7x**7**
WGMLT10X7	Teak Damper Wedge Supply Grille, 10x**7**

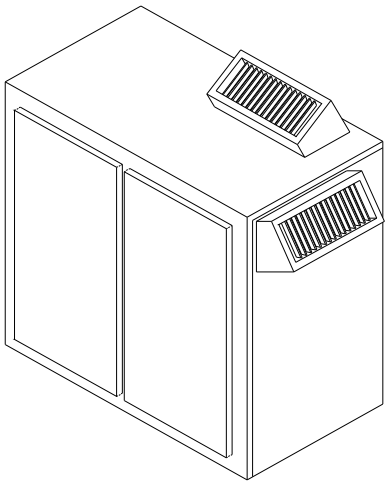

Did you know? You can install wedges on horizontal or vertical surfaces to solve difficult airflow problems.

WG Wedge Supply Grille

WGML Wedge Supply Grille

Plastic-Framed Grilles

Product Overview

Our plastic-framed grilles offers the HVAC industry an unique and functional product. The grille is constructed standard with a smooth white UV ABS vacuum-formed frame and white baked-on mill-painted aluminum blades. The blades are installed as fixed (PG) or adjustable (PGA) into an ABS plastic track. An optional black haircel ABS with black baked-on mill-painted blades is available (add the code letters BK to the end of any of the product codes). Custom paint colors are also available at additional costs.

Installed into the sides of the grille are stainless steel spring catches. They secure the blade/track assembly inside the grille frame but their primary purpose is more functional. They hold the grille into what we call a mounting frame. This mounting frame (MF) is constructed of four injection-molded corners and four pieces of extruded sides glued together. It is mounted from the finished side of the wall and then the grille is "snapped" into it. Grille removal is just as easy.

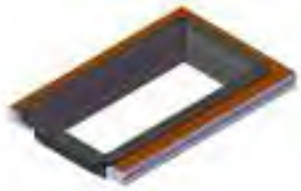

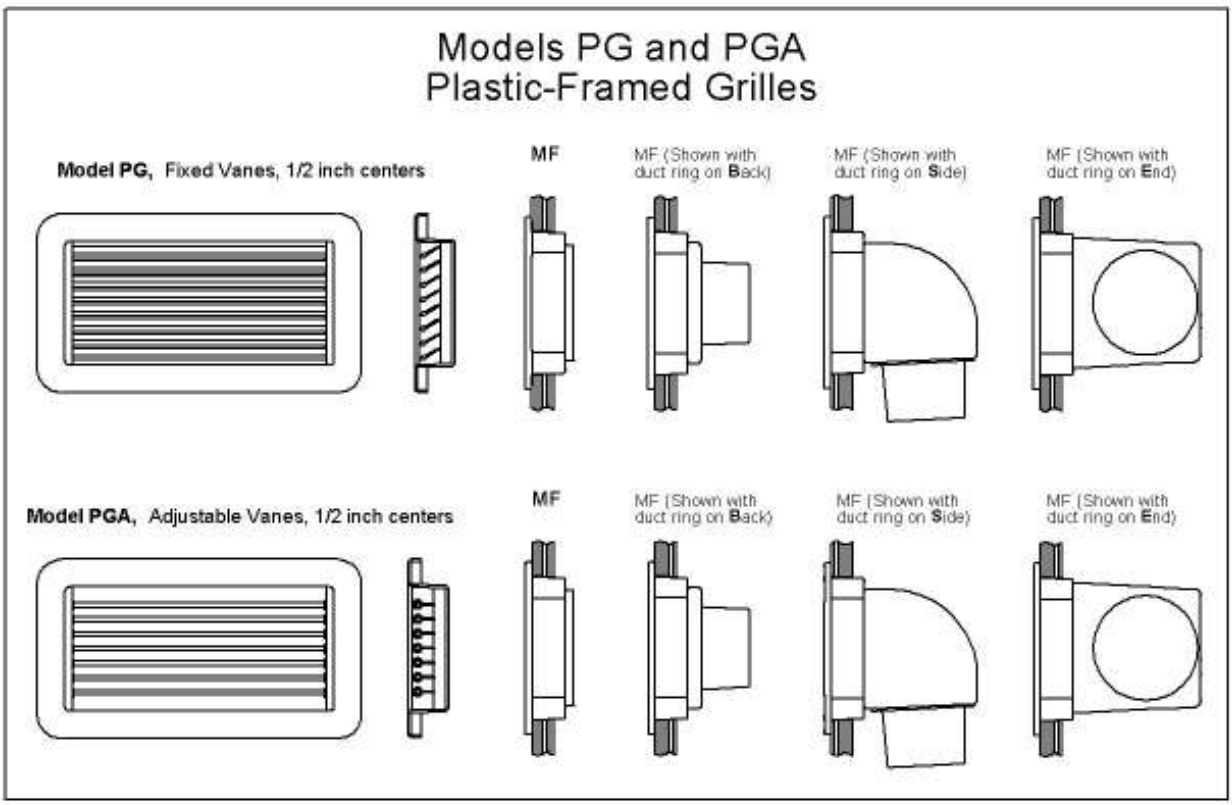

Model PGR

Unit includes grille and mounting frame (some w/rings)

Application: Return (Unfiltered) or Supply Air (Fixed Blades)
(Fixed 30 Degree Blade size in **bold**)

*Add "**-BK**" to end of item code for black finish (i.e. PG4X4R-BK)*

(Not all items shown are stocked, call us if you do not see what you need. We may be able to build it.)

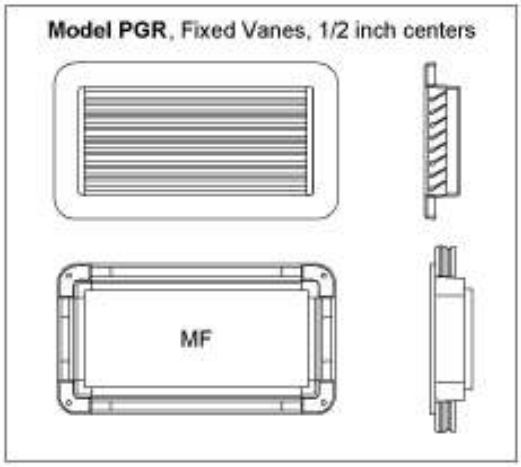

ITEM CODE	DESCRIPTION
PG4X4R	PG Grille White w/Mounting Frame, **4**x4
PG4X4R-3B	PG Grille White w/Mounting Frame, **4**x4, 3" Ring Back
PG4X4R-3S	PG Grille White w/Mounting Frame, **4**x4, 3" Ring Side
PG4X6R	PG Grille White w/Mounting Frame, **4**x6 (New Model)
PG4X8R	PG Grille White w/Mounting Frame, **4**x8
PG4X8R-4B	PG Grille White w/Mounting Frame, **4**x8, 4" Ring Back
PG4X8R-4S	PG Grille White w/Mounting Frame, **4**x8, 4" Ring Side
PG4X10R	PG Grille White w/Mounting Frame, **4**x10
PG4X10R-5B	PG Grille White w/Mounting Frame, **4**x10, 5" Ring Back
PG4X12R	PG Grille White w/Mounting Frame, **4**x12
PG4X16R	PG Grille White w/Mounting Frame, **4**x16 (New Model)
PG4X20R	PG Grille White w/Mounting Frame, **4**x20 (New Model)
PG5X5R	PG Grille White w/Mounting Frame, **5**x5
PG5X5R-4B	PG Grille White w/Mounting Frame, **5**x5, 4" Ring Back
PG5X5R-4S	PG Grille White w/Mounting Frame, **5**x5, 4" Ring Side
PG5X10R	PG Grille White w/Mounting Frame, **5**x10
PG5X10R-5B	PG Grille White w/Mounting Frame, **5**x10, 5" Ring Back
PG5X10R-5S	PG Grille White w/Mounting Frame, **5**x10, 5" Ring Side
PG5X12R	PG Grille White w/Mounting Frame, **5**x12 (New Model)
PG6X4R	PG Grille White w/Mounting Frame, **6**x4 (New Model)
PG6X6R	PG Grille White w/Mounting Frame, **6**x6
PG6X6R-5B	PG Grille White w/Mounting Frame, **6**x6, 5" Ring Back
PG6X6R-5S	PG Grille White w/Mounting Frame, **6**x6, 5" Ring Side
PG6X10R	PG Grille White w/Mounting Frame, **6**x10
PG6X12R	PG Grille White w/Mounting Frame, **6**x12 (New Model)
PG8X4R	PG Grille White w/Mounting Frame, **8**x4
PG8X4R-4B	PG Grille White w/Mounting Frame, **8**x4, 4" Ring Back
PG8X4R-4S	PG Grille White w/Mounting Frame, **8**x4, 4" Ring Side
PG8X8R	PG Grille White w/Mounting Frame, **8**x8
PG8X10R	PG Grille White w/Mounting Frame, **8**x10
PG8X16R	PG Grille White w/Mounting Frame, **8**x16
PG10X4R	PG Grille White w/Mounting Frame, **10**x4
PG10X5R	PG Grille White w/Mounting Frame, **10**x5
PG10X5R-5B	PG Grille White w/Mounting Frame, **10**x5, 5" Ring Back
PG10X5R-5S	PG Grille White w/Mounting Frame, **10**x5, 5" Ring Side
PG10X6R	PG Grille White w/Mounting Frame, **10**x6
PG10X6R-5B	PG Grille White w/Mounting Frame, **10**x6, 5" Ring Back
PG10X8R	PG Grille White w/Mounting Frame, **10**x8

PG10X8R-6B	PG Grille White w/Mounting Frame, **10**x8, 6” Ring Back
PG10X10R	PG Grille White w/Mounting Frame, **10**x10
PG10X14R	PG Grille White w/Mounting Frame, **10**x14
PG12X4R	PG Grille White w/Mounting Frame, **12**x4
PG12X4R-5B	PG Grille White w/Mounting Frame, **12**x4, 5” Ring Back
PG12X4R-4S	PG Grille White w/Mounting Frame, **12**x4, 4” Ring Side
PG12X4R-5S	PG Grille White w/Mounting Frame, **12**x4, 5” Ring Side
PG12X5R	PG Grille White w/Mounting Frame, **12**x5 (New Model)
PG12X6R	PG Grille White w/Mounting Frame, **12**x6 (New Model)
PG12X12R	PG Grille White w/Mounting Frame, **12**x12
PG12X14R	PG Grille White w/Mounting Frame, **12**x14
PG14X10R	PG Grille White w/Mounting Frame, **14**x10
PG14X12R	PG Grille White w/Mounting Frame, **14**x12
PG16X4R	PG Grille White w/Mounting Frame, **16**x4 (New Model)
PG16X8R	PG Grille White w/Mounting Frame, **16**x8
PG20X4R	PG Grille White w/Mounting Frame, **20**x4 (New Model)

Model PGRF

Unit includes grille, mounting frame and filter

Application: Return-Air Only
(Fixed 30 Degree, Blade size in **bold**)

*Add **-BK** to end of item code for black haircel finish (i.e. PG4X4RF-BK)*

(Not all items shown are stocked, call us if you do not see what you need. We may be able to build it.)

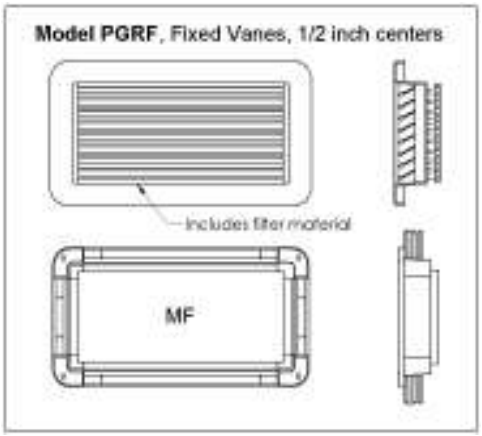

ITEM CODE	DESCRIPTION
PG4X4RF	PG Grille White w/Mounting Frame & Filter, **4**x4 (Replaces PG3)
PG4X6RF	PG Grille White w/Mounting Frame & Filter, **4**x6 (New Model)
PG4X8RF	PG Grille White w/Mounting Frame & Filter, **4**x8
PG4X10RF	PG Grille White w/Mounting Frame & Filter, **4**x10
PG4X12RF	PG Grille White w/Mounting Frame & Filter, **4**x12
PG4X16RF	PG Grille White w/Mounting Frame & Filter, **4**x16 (New Model)
PG4X20RF	PG Grille White w/Mounting Frame & Filter, **4**x20 (New Model)
PG5X5RF	PG Grille White w/Mounting Frame & Filter, **5**x5 (Replaces PG4)
PG5X10RF	PG Grille White w/Mounting Frame & Filter, **5**x10
PG5X12RF	PG Grille White w/Mounting Frame & Filter, **5**x12 (New Model)
PG6X4RF	PG Grille White w/Mounting Frame & Filter, **6**x4 (New Model)
PG6X6RF	PG Grille White w/Mounting Frame & Filter, **6**x6
PG6X10RF	PG Grille White w/Mounting Frame & Filter, **6**x10
PG6X12RF	PG Grille White w/Mounting Frame & Filter, **6**x12 (New Model)
PG8X4RF	PG Grille White w/Mounting Frame & Filter, **8**x4
PG8X8RF	PG Grille White w/Mounting Frame & Filter, **8**x8
PG8X10RF	PG Grille White w/Mounting Frame & Filter, **8**x10
PG8X16RF	PG Grille White w/Mounting Frame & Filter, **8**x16
PG10X4RF	PG Grille White w/Mounting Frame & Filter, **10**x4
PG10X5RF	PG Grille White w/Mounting Frame & Filter, **10**x5
PG10X6RF	PG Grille White w/Mounting Frame & Filter, **10**x6

PG10X8RF	PG Grille White w/Mounting Frame & Filter, **10**x8
PG10X10RF	PG Grille White w/Mounting Frame & Filter, **10**x10
PG10X14RF	PG Grille White w/Mounting Frame & Filter, **10**x14
PG12X4RF	PG Grille White w/Mounting Frame & Filter, **12**x4
PG12X5RF	PG Grille White w/Mounting Frame & Filter, **12**x5 (New Model)
PG12X6RF	PG Grille White w/Mounting Frame & Filter, **12**x6 (New Model)
PG12X12RF	PG Grille White w/Mounting Frame & Filter, **12**x12
PG12X14RF	PG Grille White w/Mounting Frame & Filter, **12**x14
PG14X10RF	PG Grille White w/Mounting Frame & Filter, **14**x10
PG14X12RF	PG Grille White w/Mounting Frame & Filter, **14**x12
PG16X4RF	PG Grille White w/Mounting Frame & Filter, **16**x4 (New Model)
PG16X8RF	PG Grille White w/Mounting Frame & Filter, **16**x8
PG20X4RF	PG Grille White w/Mounting Frame & Filter, **20**x4 (New Model)

Model PGAR

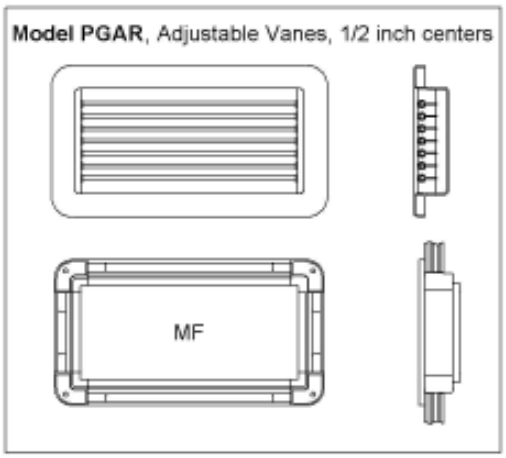

Unit includes grille and mounting frame

Application: Supply Air (Adjustable Blades)
(Blade size in **bold**)

*Add **-BK** to end of item code for black finish (i.e. PG44R-BK)*

(Not all items shown are stocked, call us if you do not see what you need. We may be able to build it.)

ITEM CODE	DESCRIPTION
PGA4X4R	PGA Grille White w/Mounting Frame, **4**x4
PGA4X4R-3B	PGA Grille White w/Mounting Frame, **4**x4, 3” Ring Back
PGA4X4R-3S	PGA Grille White w/Mounting Frame, **4**x4, 3” Ring Side
PGA4X6R	PGA Grille White w/Mounting Frame, **4**x6 (New Model)
PGA4X8R	PGA Grille White w/Mounting Frame, **4**x8
PGA4X8R-4B	PGA Grille White w/Mounting Frame, **4**x8, 4” Ring Back
PGA4X8R-4S	PGA Grille White w/Mounting Frame, **4**x8, 4” Ring Side
PGA4X10R	PGA Grille White w/Mounting Frame, **4**x10
PGA4X10R-5B	PGA Grille White w/Mounting Frame, **4**x10, 5” Ring Back
PGA4X10R-4S	PGA Grille White w/Mounting Frame, **4**x10, 4” Ring Side
PGA4X10R-5S	PGA Grille White w/Mounting Frame, **4**x10, 5” Ring Side
PGA4X12R	PGA Grille White w/Mounting Frame, **4**x12
PGA4X12R-5B	PGA Grille White w/Mounting Frame, **4**x12, 5” Ring Back
PGA4X16R	PGA Grille White w/Mounting Frame, **4**x16 (New Model)
PGA4X20R	PGA Grille White w/Mounting Frame, **4**x20 (New Model)
PGA5X5R	PGA Grille White w/Mounting Frame, **5**x5
PGA5X5R-4B	PGA Grille White w/Mounting Frame, **5**x5, 4” Ring Back
PGA5X5R-4S	PGA Grille White w/Mounting Frame, **5**x5, 4” Ring Side
PGA5X10R	PGA Grille White w/Mounting Frame, **5**x10
PGA5X10R-5B	PGA Grille White w/Mounting Frame, **5**x10, 5” Ring Back
PGA5X10R-4S	PGA Grille White w/Mounting Frame, **5**x10, 4” Ring Side
PGA5X10R-5S	PGA Grille White w/Mounting Frame, **5**x10, 5” Ring Side
PGA5X12R	PGA Grille White w/Mounting Frame, **5**x12 (New Model)
PGA6X4R	PGA Grille White w/Mounting Frame, **6**x4 (New Model)

PGA6X6R	PGA Grille White w/Mounting Frame, **6**x6
PGA6X6R-5B	PGA Grille White w/Mounting Frame, **6**x6, 5” Ring Back
PGA6X6R-5S	PGA Grille White w/Mounting Frame, **6**x6, 5” Ring Side
PGA6X10R	PGA Grille White w/Mounting Frame, **6**x10
PGA6X10R-4B	PGA Grille White w/Mounting Frame, **6**x10, 4” Ring Back
PGA6X10R-5B	PGA Grille White w/Mounting Frame, **6**x10, 5” Ring Back
PGA6X10R-6B	PGA Grille White w/Mounting Frame, **6**x10, 6” Ring Back
PGA6X10R-4S	PGA Grille White w/Mounting Frame, **6**x10, 4” Ring Side
PGA6X10R-5S	PGA Grille White w/Mounting Frame, **6**x10, 5” Ring Side
PGA6X12R	PGA Grille White w/Mounting Frame, **6**x12 (New Model)
PGA8X4R	PGA Grille White w/Mounting Frame, **8**x4
PGA8X4R-4B	PGA Grille White w/Mounting Frame, **8**x4, 4” Ring Back
PGA8X4R-5B	PGA Grille White w/Mounting Frame, **8**x4, 5” Ring Back
PGA8X4R-4S	PGA Grille White w/Mounting Frame, **8**x4, 4” Ring Side
PGA8X4R-5S	PGA Grille White w/Mounting Frame, **8**x4, 5” Ring Side
PGA8X8R	PGA Grille White w/Mounting Frame, **8**x8
PGA8X10R	PGA Grille White w/Mounting Frame, **8**x10
PGA8X10R-6B	PGA Grille White w/Mounting Frame, **8**x10, 6” Ring Back
PGA8X10R-7B	PGA Grille White w/Mounting Frame, **8**x10, 7” Ring Back
PGA8X16R	PGA Grille White w/Mounting Frame, **8**x16
PGA10X4R	PGA Grille White w/Mounting Frame, **10**x4
PGA10X4R-4B	PGA Grille White w/Mounting Frame, **10**x4, 4” Ring Back
PGA10X4R-5B	PGA Grille White w/Mounting Frame, **10**x4, 5” Ring Back
PGA10X4R-4S	PGA Grille White w/Mounting Frame, **10**x4, 4” Ring Side
PGA10X4R-5S	PGA Grille White w/Mounting Frame, **10**x4, 5” Ring Side
PGA10X5R	PGA Grille White w/Mounting Frame, **10**x5
PGA10X5R-5B	PGA Grille White w/Mounting Frame, **10**x5, 5” Ring Back
PGA10X5R-4S	PGA Grille White w/Mounting Frame, **10**x5, 4” Ring Side
PGA10X5R-5S	PGA Grille White w/Mounting Frame, **10**x5, 5” Ring Side
PGA10X6R	PGA Grille White w/Mounting Frame, **10**x6
PGA10X6R-5B	PGA Grille White w/Mounting Frame, **10**x6, 5” Ring Back
PGA10X6R-6B	PGA Grille White w/Mounting Frame, **10**x6, 6” Ring Back
PGA10X6R-5S	PGA Grille White w/Mounting Frame, **10**x6, 5” Ring Side
PGA10X8R	PGA Grille White w/Mounting Frame, **10**x8
PGA10X8R-6B	PGA Grille White w/Mounting Frame, **10**x8, 6” Ring Back
PGA10X8R-7B	PGA Grille White w/Mounting Frame, **10**x8, 7” Ring Back
PGA10X10R	PGA Grille White w/Mounting Frame, **10**x10
PGA10X14R	PGA Grille White w/Mounting Frame, **10**x14
PGA12X4R	PGA Grille White w/Mounting Frame, **12**x4
PGA12X4R-4B	PGA Grille White w/Mounting Frame, **12**x4, 4” Ring Back
PGA12X4R-5B	PGA Grille White w/Mounting Frame, **12**x4, 5” Ring Back
PGA12X4R-4S	PGA Grille White w/Mounting Frame, **12**x4, 4” Ring Side
PGA12X4R-5S	PGA Grille White w/Mounting Frame, **12**x4, 5” Ring Side
PGA12X5R	PGA Grille White w/Mounting Frame, **12**x5 (New Model)
PGA12X5R-4B	PGA Grille White w/Mounting Frame, **12**x5, 4” Ring Back (New Model)
PGA12X5R-5B	PGA Grille White w/Mounting Frame, **12**x5, 5” Ring Back (New Model)
PGA12X5R-4S	PGA Grille White w/Mounting Frame, **12**x5, 4” Ring Side (New Model)
PGA12X6R	PGA Grille White w/Mounting Frame, **12**x6 (New Model)
PGA12X12R	PGA Grille White w/Mounting Frame, **12**x12
PGA12X14R	PGA Grille White w/Mounting Frame, **12**x14
PGA14X10R	PGA Grille White w/Mounting Frame, **14**x10
PGA14X12R	PGA Grille White w/Mounting Frame, **14**x12
PGA16X4R	PGA Grille White w/Mounting Frame, **16**x4 (New Model)
PGA16X8R	PGA Grille White w/Mounting Frame, **16**x8
PGA20X4R	PGA Grille White w/Mounting Frame, **20**x4 (New Model)

Ducting Products

Whether you choose our wood-framed or plastic-framed grilles, you will need a way to duct conditioned air to them. We manufacture a complete line of plastic ducting products from the hose adapter on the air handler to the transitions behind our wood-framed grilles. On the next few pages you will find an assortment of duct rings, adapters, transitions, special transitions, plenum boxes and the widest range of AirDividers available anywhere.

PLASTIC DUCTING PRODUCTS

HOSE RINGS, ROUND

ITEM CODE	DESCRIPTION
HR2	Hose Ring, Round, 2”
HR3	Hose Ring, Round, 3”
HR4	Hose Ring, Round, 4”
HR5	Hose Ring, Round, 5”
HR6	Hose Ring, Round, 6”
HR7	Hose Ring, Round, 7”
HR8	Hose Ring, Round, 8”

HOSE RINGS, FLAT OVAL

ITEM CODE	DESCRIPTION
HRF4	Hose Ring, Flat Oval, 4”
HRF5	Hose Ring, Flat Oval, 5”
HRF6	Hose Ring, Flat Oval, 6”
HRF7	Hose Ring, Flat Oval, 7”
HRF8	Hose Ring, Flat Oval, 8”

BLOWER ADAPTERS

ITEM CODE	DESCRIPTION
HA3	Blower Adapter, 3” Duct or AirDivider
HA4	Blower Adapter, 4” Duct or AirDivider
HA5	Blower Adapter, 5” Duct or AirDivider
HA6	Blower Adapter, 6” Duct or AirDivider
HA616	Blower Adapter, 6” Duct or AirDivider
HA716	Blower Adapter, 7” Duct or AirDivider
HA6BL	Blower Adapter, 6” Duct or AirDivider
HA7BL	Blower Adapter, 7” Duct or AirDivider
HA8-18	Blower Adapter, 8” Duct or AirDivider

PLASTIC DUCTING PRODUCTS

TRANSITIONS, STANDARD (ORDER RINGS ON PREVIOUS PAGE)

ITEM CODE	DESCRIPTION
TB64	Transition Box, 6X4
TB84	Transition Box, 8x4
TB104	Transition Box, 10x4
TB124	Transition Box, 12x4
TB144	Transition Box, 14x4
TB164	Transition Box, 16x4
TB204	Transition Box, 20x4
TB85	Transition Box, 8x5
TB105	Transition Box, 10x5
TB125	Transition Box, 12x5
TB145	Transition Box, 14x5
TB205	Transition Box, 20x5
TB66	Transition Box, 6x6
TB86	Transition Box, 8x6
TB106	Transition Box, 10x6
TB126	Transition Box, 12x6
TB146	Transition Box, 14x6
TB166	Transition Box, 16x6
TB206	Transition Box, 20x6
TB77	Transition Box, 7x7
TB88	Transition Box, 8x8
TB108	Transition Box, 10x8
TB168	Transition Box, 16x8
TB1010	Transition Box, 10x10
TB1212	Transition Box, 12x12

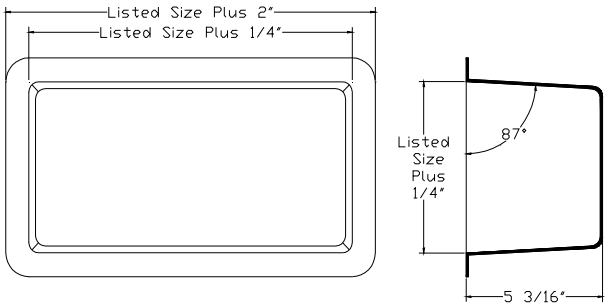

Our standard transition boxes are constructed of black ABS with a haircel finish. They are all slightly more than 5" deep and at the opening they are 1/4" larger than the nominal size. The flange corners and all edges are rounded to avoid sharp points.

All of our standard transitions boxes can be assembled at the factory with one or more rings attached and additionally openings can be closed to create a distribution plenum. Specify the side by letter followed by a ring size. We will use a round ring if possible. If not, we will use either an oblong ring or a flat oval. The opening can be closed off with a blank or with one or more rings. Please provide a drawing for complex configurations and any internal baffles.

PLASTIC DUCTING PRODUCTS

TRANSITION, RING Back

ITEM CODE	DESCRIPTION
TB44-3B	Transition Box, 4x4, 3” Ring Back
TB44-4B	Transition Box, 4x4, 4” Ring Back
TB64-3B	Transition Box, 6x4, 3” Ring Back
TB64-4B	Transition Box, 6x4, 4” Ring Back
TB84-4B	Transition Box, 8x4, 4” Ring Back
TB84-5B	Transition Box, 8x4, 5” Ring Back
TB86-6B	Transition Box, 8x6, 6” Ring Back
TB104-5B	Transition Box, 10x4, 5” Ring Back
TB104-6B	Transition Box, 10x4, 6” Ring Back
TB105-5B	Transition Box, 10x5, 5” Ring Back
TB106-5B	Transition Box, 10x6, 5” Ring Back
TB106-6B	Transition Box, 10x6, 6” Ring Back
TB145-7B	Transition Box, 14x5, 7” Ring Back

TRANSITION, RING SIDE

ITEM CODE	DESCRIPTION
TB84-4S	Transition Box, 8x4, 4” Ring Side
TB84-5S	Transition Box, 8x4, 5” Ring Side
TB84-6S	Transition Box, 8x4, 6” Ring Side
TB104-4S	Transition Box, 10x4, 4” Ring Side
TB104-5S	Transition Box, 10x4, 5” Ring Side
TB104-6S	Transition Box, 10x4, 6” Ring Side
TB124-5S	Transition Box, 12x4, 5” Ring Side
TB124-6S	Transition Box, 12x4, 6” Ring Side

TRANSITION, RING END (also transition hose ring adapters to fit standard transitions)

ITEM CODE	DESCRIPTION
TR3-4E	Transition Hose Ring, 3”
TR4-4E	Transition Hose Ring, 4”
TB44-3E	Transition Box, 4x4, 3” Ring End
TB44-4E	Transition Box, 4x4, 4” Ring End
TB64-3E	Transition Box, 6x4, 3” Ring End
TB64-4E	Transition Box, 6x4, 4” Ring End
TB84-4E	Transition Box, 8x4, 4” Ring End
TB104-4E	Transition Box, 10x4, 4” Ring End
TB105-5E	Transition Box, 10x5, 5” Ring End
TB124-4E	Transition Box, 12x4, 4” Ring End

Plenum Boxes ***(Optional Factory or Field Installed Rings, Baffles, Adapter Covers)***

PL5	Plenum Box, Blank Sides & Cover (Fits 5” Ring)
PL6	Plenum Box, Blank Sides & Cover (Fits 6” Ring)
PL7	Plenum Box, 7”x7”x7”, Blank Sides & Cover

AirDivider

2 Inlet Supply Types (A or H)

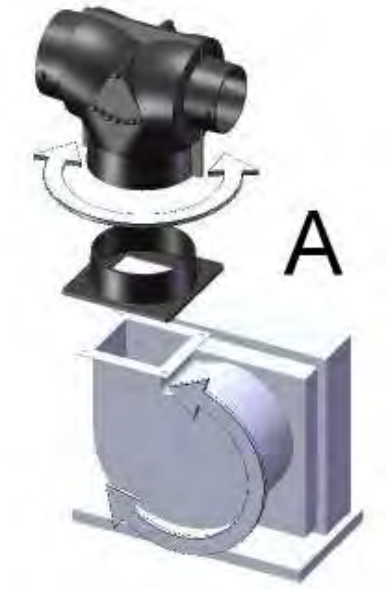

Configure our AirDividers by first choosing one of two inlet supply types (Adapter on left or Hose on right). Both begin with a blower adapter secured to your unit. If you want to mount our AirDivider directly onto the blower specify “A”. The draft angle on our blower adapters is a perfect fit for our A-style AirDividers. Rotate the AirDivider as necessary and secure. If you will be connecting to the blower with hose duct specify “H” and secure duct on all fittings.

3 Basic Shapes (T, Y, P)

There are three basic AirDivider shapes “T”, “Y” and our new “P” and they are available in all sizes. The “T” and “Y” shape are self-explanatory. The “P” shape is derived from “pistol” where the inlet is the pistol grip, the outlet to the right at 90 degrees is the barrel and the outlet at 30 degrees to the left is the hammer. It will be important to use this pistol image if you specify different outlet sizes in this “P” model. See more explanations later in this section.

At this point you have six possible designations to include AT, AY, AP, HT, HY and HP.

Inlet Fittings

We have five basic AirDivider bodies (4”-8”). We have seven adapter inlet fittings (3”-9”) and seven hose inlet fittings (3”-9”). We are currently putting the 3” on the 4” body and the 9” on the 8” body. As you will see below we have 42 possible models even before we add the outlet fittings.

4”-Body AT3, AT4, AY3, AY4, AP3, AP4, HT3, HT4, HY3, HY4, HP3, HP4
5”-Body AT5, AY5, AP5, HT5, HY5, HP5
6”-Body AT6, AY6, AP6, HT6, HY6, HP6
7”-Body AT7, AY7, AP7, HT7, HY7, HP7
8”-Body AT8, AT9, AY8, AY9, AP8, AP9, HT8, HT9, HY8, HY9, HP8, HP9

Outlet Fittings

It is now time to add the two outlet sizes to our AirDividers. We have seven possible outlet size from 2” - 8”. The maximum outlet size is controlled by the body size which is controlled by the inlet size. Available outlet sizes per body are:

4”-Body 2”, 3”, 4”
5”-Body 2”, 3”, 4”, 5”
6”-Body 2”, 3”, 4”, 5”, 6”
7”-Body 2”, 3”, 4”, 5”, 6”, 7”
8”-Body 2”, 3”, 4”, 5”, 6”, 7”, 8”

Instructions for P Model

Please pay attention to these instructions for specifying our P model. *If you specify equal sized outlet sizes you can skip these instructions.* The order of numbering is inlet size (pistol grip) followed by the left side (hammer) and then ending with the right side (barrel). Let’s say that you have decided on a AP4 model which will fit on our HA4 blower adapter. You want a 4” hose to go out the barrel but you want a 3” at the trigger. The part number would be AP434.

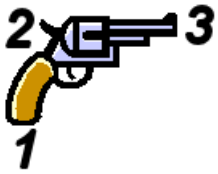

Hidden inside of all of our AirDividers is our exclusive air diverter. Cut on our CNC routers this simple piece of plastic is very effective in controlling the amount of air force at the two outlets. With the new models we also started adding simple bumps to the outlets to assist in securing hose duct. Although our inventive AirDividers have been copied in concept and name we feel that no one has equaled the MSI AirDivider.

Our Most Common Models

HY544	HY654	HT443	HT755
HT444	HY663	AT654	HY533
HY433	AY653	HT644	AT653
HY554	HT554	HY655	HT664
HY553	AT544	HY764	AT644
HT544	AT764	AY644	AT755
AT655	HY755	HT553	AY544
HY664	HT655	AT663	HT775
HY644	HY543	HT755	AY664
HY444	HY653	HY533	AT664
AT553	HY443	AT663	AY654

Custom AirDividers Available

AIR DIVIDER – ADAPTER T

ITEM CODE	DESCRIPTION
AT443	Adapter T, 4” Inlet– 4”, 3” Outlets
AT444	Adapter T, 4” Inlet– 4”, 4” Outlets
AT543	Adapter T, 5” Inlet– 4”, 3” Outlets
AT544	Adapter T, 5” Inlet– 4”, 4” Outlets
AT553	Adapter T, 5” Inlet– 5”, 3” Outlets
AT554	Adapter T, 5” Inlet– 5”, 4” Outlets
AT555	Adapter T, 5” Inlet– 5”, 5” Outlets
AT644	Adapter T, 6” Inlet– 4”, 4” Outlets
AT653	Adapter T, 6” Inlet– 5”, 3” Outlets
AT654	Adapter T, 6” Inlet– 5”, 4” Outlets
AT655	Adapter T, 6” Inlet– 5”, 5” Outlets
AT663	Adapter T, 6” Inlet– 6”, 3” Outlets
AT664	Adapter T, 6” Inlet– 6”, 4” Outlets
AT665	Adapter T, 6” Inlet– 6”, 5” Outlets
AT666	Adapter T, 6” Inlet– 6”, 6” Outlets
AT754	Adapter T, 7” Inlet– 5”, 4” Outlets
AT755	Adapter T, 7” Inlet– 5”, 5” Outlets
AT763	Adapter T, 7” Inlet– 6”, 3” Outlets
AT764	Adapter T, 7” Inlet– 6”, 4” Outlets
AT765	Adapter T, 7” Inlet– 6”, 5” Outlets
AT766	Adapter T, 7” Inlet– 6”, 6” Outlets
AT774	Adapter T, 7” Inlet– 7”, 4” Outlets
AT775	Adapter T, 7” Inlet– 7”, 5” Outlets

Did you know? All of our air dividers include our exclusive internal manually adjustable divider.

AIR DIVIDER – ADAPTER Y

ITEM CODE	DESCRIPTION
AY444	Adapter Y, 4” Inlet– 4”, 4” Outlets
AY543	Adapter Y, 5” Inlet– 4”, 3” Outlets
AY544	Adapter Y, 5” Inlet– 4”, 4” Outlets
AY554	Adapter Y, 5” Inlet– 5”, 4” Outlets
AY555	Adapter Y, 5” Inlet– 5”, 5” Outlets
AY644	Adapter Y, 6” Inlet– 4”, 4” Outlets
AY653	Adapter Y, 6” Inlet– 5”, 3” Outlets
AY654	Adapter Y, 6” Inlet– 5”, 4” Outlets
AY655	Adapter Y, 6” Inlet– 5”, 5” Outlets
AY664	Adapter Y, 6” Inlet– 6”, 4” Outlets
AY665	Adapter Y, 6” Inlet– 6”, 5” Outlets
AY666	Adapter Y, 6” Inlet– 6”, 6” Outlets
AY744	Adapter Y, 7” Inlet– 4”, 4” Outlets
AY754	Adapter Y, 7” Inlet– 5”, 4” Outlets
AY755	Adapter Y, 7” Inlet– 5”, 5” Outlets
AY763	Adapter Y, 7” Inlet– 6”, 3” Outlets
AY764	Adapter Y, 7” Inlet– 6”, 4” Outlets
AY765	Adapter Y, 7” Inlet– 6”, 5” Outlets

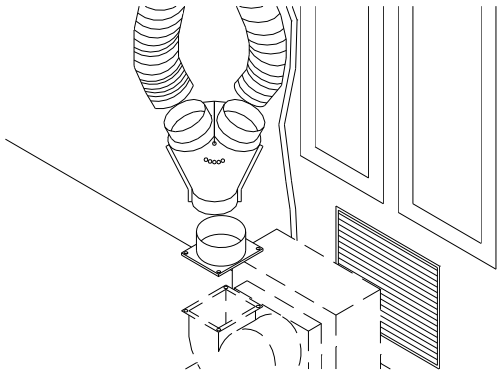

AIR DIVIDER – HOSE T

ITEM CODE	DESCRIPTION
HT433	Hose T, 4” Inlet– 3”, 3” Outlets
HT443	Hose T, 4” Inlet– 4”, 3” Outlets
HT444	Hose T, 4” Inlet– 4”, 4” Outlets
HT543	Hose T, 5” Inlet– 4”, 3” Outlets
HT544	Hose T, 5” Inlet– 4”, 4” Outlets
HT553	Hose T, 5” Inlet– 5”, 3” Outlets
HT554	Hose T, 5” Inlet– 5”, 4” Outlets
HT555	Hose T, 5” Inlet– 5”, 5” Outlets
HT643	Hose T, 6” Inlet– 4”, 3” Outlets
HT644	Hose T, 6” Inlet– 4”, 4” Outlets
HT653	Hose T, 6” Inlet– 5”, 3” Outlets
HT654	Hose T, 6” Inlet– 5”, 4” Outlets
HT655	Hose T, 6” Inlet– 5”, 5” Outlets
HT663	Hose T, 6” Inlet– 6”, 3” Outlets
HT664	Hose T, 6” Inlet– 6”, 4” Outlets
HT665	Hose T, 6” Inlet– 6”, 5” Outlets
HT666	Hose T, 6” Inlet– 6”, 6” Outlets
HT744	Hose T, 7” Inlet– 4”, 4” Outlets
HT753	Hose T, 7” Inlet– 5”, 3” Outlets
HT754	Hose T, 7” Inlet– 5”, 4” Outlets
HT755	Hose T, 7” Inlet– 5”, 5” Outlets
HT763	Hose T, 7” Inlet– 6”, 3” Outlets
HT764	Hose T, 7” Inlet– 6”, 4” Outlets
HT765	Hose T, 7” Inlet– 6”, 5” Outlets
HT766	Hose T, 7” Inlet– 6”, 6” Outlets
HT774	Hose T, 7” Inlet– 7”, 4” Outlets
HT775	Hose T, 7” Inlet– 7”, 5” Outlets
HT864	Hose T, 8” Inlet– 6”, 4” Outlets
HT874	Hose T, 8” Inlet– 7”, 4” Outlets
HT877	Hose T, 8” Inlet– 7”, 7” Outlets

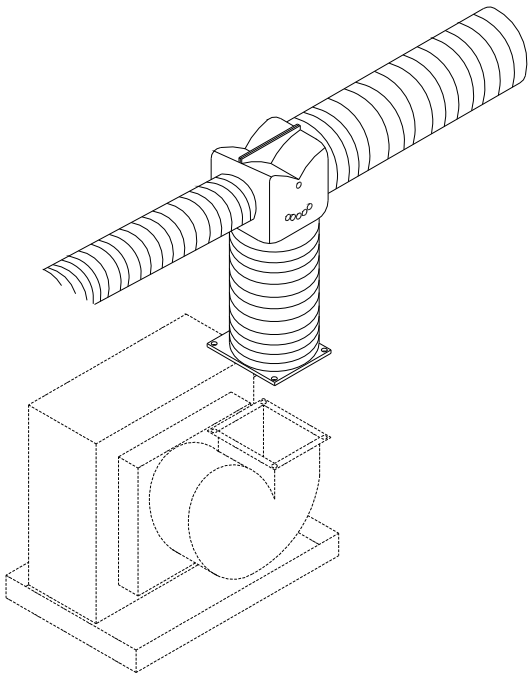

AIR DIVIDER – HOSE Y

ITEM CODE	DESCRIPTION
HY433	Hose Y, 4” Inlet– 3”, 3” Outlets
HY444	Hose Y, 4” Inlet– 4”, 4” Outlets
HY533	Hose Y, 5” Inlet– 3”, 3” Outlets
HY543	Hose Y, 5” Inlet– 4”, 3” Outlets
HY544	Hose Y, 5” Inlet– 4”, 4” Outlets
HY553	Hose Y, 5” Inlet– 5”, 3” Outlets
HY554	Hose Y, 5” Inlet– 5”, 4” Outlets
HY555	Hose Y, 5” Inlet– 5”, 5” Outlets
HY643	Hose Y, 6” Inlet– 4”, 3” Outlets
HY644	Hose Y, 6” Inlet– 4”, 4” Outlets
HY654	Hose Y, 6” Inlet– 5”, 4” Outlets
HY655	Hose Y, 6” Inlet– 5”, 5” Outlets
HY664	Hose Y, 6” Inlet– 6”, 4” Outlets
HY665	Hose Y, 6” Inlet– 6”, 5” Outlets
HY666	Hose Y, 6” Inlet– 6”, 6” Outlets
HY744	Hose Y, 7” Inlet– 4”, 4” Outlets
HY754	Hose Y, 7” Inlet– 5”, 4” Outlets
HY755	Hose Y, 7” Inlet– 5”, 5” Outlets
HY763	Hose Y, 7” Inlet– 6”, 3” Outlets
HY764	Hose Y, 7” Inlet– 6”, 4” Outlets
HY765	Hose Y, 7” Inlet– 6”, 5” Outlets
HY766	Hose Y, 7” Inlet– 6”, 6” Outlets
HY774	Hose Y, 7” Inlet– 7”, 4” Outlets

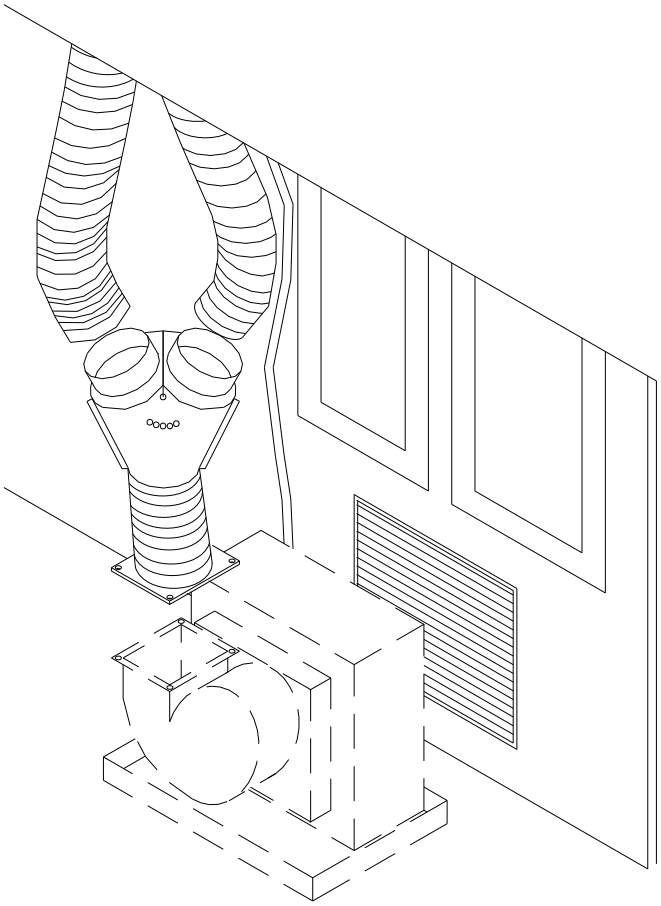

90° Adapter/Hose Elbows

Use our elbows in areas where hose duct crushing can occur and compromise airflow. Our adapter style will fit on our equivalent sized hose adapters. Rotate to the desired angle and secure. Our hose style can be used anywhere along the air supply route. Outlet side includes our simple bumps to assist in securing hose duct. Current sizes available includes 4",5",6" and 7".

Contact us for custom applications.

2 Inlet Supply Types (A or H)

A

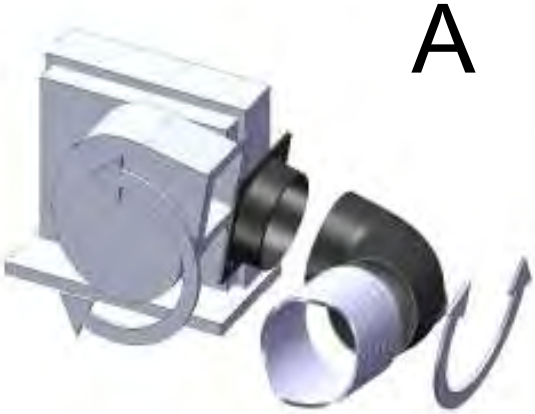

H

ITEM CODE	DESCRIPTION
A4-90	4" Adapter Elbow, 90°
A5-90	5" Adapter Elbow, 90°
A6-90	6" Adapter Elbow, 90°
A7-90	7" Adapter Elbow, 90°
A8-90	8" Adapter Elbow, 90°

H4-90	4" Hose Elbow, 90°
H5-90	5" Hose Elbow, 90°
H6-90	6" Hose Elbow, 90°
H7-90	7" Hose Elbow, 90°
H8-90	8" Hose Elbow, 90°

MISCELLANEOUS PARTS

Round Plastic Grilles (Global Style)

ITEM CODE	DESCRIPTION
3GL-BK	3” Round Global Style, Black
3GL-BK3	3” Round Global Style, Black, With 3” Hose Adapter
3GL-W	3” Round Global Style, White
3GL-W3	3” Round Global Style, White, With 3” Hose Adapter
3GL-OW	3” Round Global Style, Off-White
3GL-OW3	3” Round Global Style, Off-White, With 3” Hose Adapter

Round Plastic Grilles (Traditional Style)

ITEM CODE	DESCRIPTION
R4ABK	4” Round Damper Vent, Black
R4ABN	4” Round Damper Vent, Brown
R4AW	4” Round Damper Vent, White
R4AOW	4” Round Damper Vent, Off-White

RR3-4R	3” Hose Adapter to 4” Round Vent

AQUAIR
MARINE AIR CONDITIONING SYSTEMS

Price Level	Code (WC)	Name (WN)	Wood Description
1	A	ASH	AMERICAN WHITE ASH
1	B	BEECH	AMERICAN BEECH
1	SC	CEDAR	SPANISH CEDAR
1	H	HICKORY	AMERICAN HICKORY
1	JT	JATOBA	BRAZILIAN JATOBA
1	MK	MAKORE	AFRICAN CHERRY
1	MA	MAPLE	AMERICAN SOFT MAPLE
1	O	OAK	AMERICAN WHITE OAK
1	P	POPLAR	AMERICAN POPLAR
2	C	CHERRY	AMERICAN CHERRY
2	M	MAHOGANY	HONDURAN MAHOGANY
2	T	TEAK	ASIAN TEAK
2	W	WALNUT	AMERICAN BLACK WALNUT

AQUA AIR

MARINE AIR CONDITIONING SYSTEMS

Direct Expansion Split
Marine Air Conditioning System

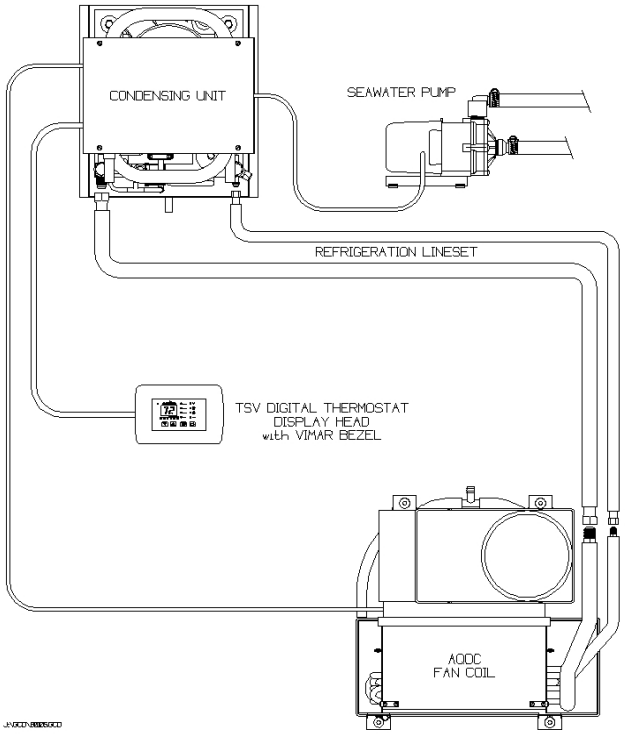

Installation, Operation & Maintenance

Table of Contents

I Introduction 3

II General Description of Basic Components
- A. Fan Coil 3
- B. Condensing Unit 4
- C. Thermostats 4
- D. Seawater Pump 6
- E. Pump Relays 7
- F. Ducting, Grilles & Transition Boxes 7
- G. Seawater Kits 8
- H. Refrigerant Line Sets 8
- I. Basic Theory of System Operation 9

III Installation of Basic Components
- A. Fan Coil 11
- B. Condensing Unit 16
- C. Refrigerant Line Sets 17
- D. Flaring Copper Tubing 17
- E. Thermostats 18
- F. Seawater Pump 21

IV Before Starting the System for the First Time 23

V System Leak Checking and Refrigerant Charging
- A. Leak Checking the System 25
- B. Charging the System with Refrigerant 26
- C. Recovering Refrigerant from the System 27

VI System Operation
- A. Systems with AQS3 Thermostats 27
- B. Systems with Sapphire Thermostats 29
- C. Reverse Cycle System Limitations 30

VII Maintenance
- A. Fan Coil 31
- B. Seawater System 31

VIII Winterizing 31

IX General Warnings 32

X Thermostat Cut-out Templates 33

XI Refrigerant Charging Charts 34

XII Refrigerant Line Set Sizing and Refrigerant Tee Arrangements 35

XIII System Wiring Diagrams 38

I. Introduction

Thank you for purchasing an Aqua-Air® Direct Expansion Split Marine Air Conditioning System.

The purpose of this manual is to inform you of the different components that you will need to install a fully operational direct expansion split air conditioning system on your boat and to give you the basic information necessary to correctly install all of the components that comprise the direct expansion split air conditioning system.

The Aqua-Air® direct expansion split air conditioning system have been specifically designed for use in the marine environment. Systems are available in a range of capacities from 5-16,000 BTU/H in 115/1/60 and 7-48,000 BTU/H in 230/1/60 voltage inputs (the 24-48,000 BTU/H units are also available in 208-230/3/50-60 and 460/3/50-60). All systems are rated for full capacity on 60 Hz power, however, they can be operated on 50 Hz power sources with a corresponding 17% decrease in capacity. The 50 Hz power sources would normally be 100/1/50, 200-220/1/50, or 380/3/50. All of the systems are available as reverse cycle units.

II. General Description of Basic Components

There are six basic components that make up a typical Aqua-Air® Direct Expansion Split Air Conditioning System:

A. Fan Coil
B. Condensing Unit
C. Thermostat
D. Seawater Pump
E. Pump Relay
F. Ducting, Grilles and Transition Boxes
G. Seawater Kit
H. Refrigerant Line Sets

Following is a description of each major component.

A. Fan Coil

The Fan Coil (also referred to as an evaporator or air handler) is a refrigerant to air heat exchanger located in the area that is to be either cooled or heated. The basic unit is made up of the following major components:

1. Evaporator coil
2. Capillary tube refrigerant metering device
3. Squirrel cage blower and motor or propeller fan blade and motor
4. Metal chassis with integral drain pan

There are two different fan coil configurations, defined only by the direction that the air passes through the fan coil.

1. Blow-thru Fan Coil - air is blown across the evaporator coil
   Examples: AQB, AQBH, AQE, AQL
2. Draw-thru Fan Coil - air is drawn across the evaporator coil
   Examples: AQO, AQOC, AQOH, AQC

B. Condensing Unit

The Condensing Unit is made up of the following major components:

1. Refrigerant compressor
2. Suction accumulator
3. Reversing valve (if it is a heat pump model)
4. Base valves with service ports
5. Condenser
6. Electrical starting components for the compressor
7. Drain pan & mounting base

C. Thermostat

The thermostat / controller used to operate the unit can be provided in one of two different configurations:

1. Three knob manual thermostat (AQS3 series thermostat). The thermostats main components are:

   Off-Fan-Run mode switch
   Fan speed control
   Thermostat
   Terminal block

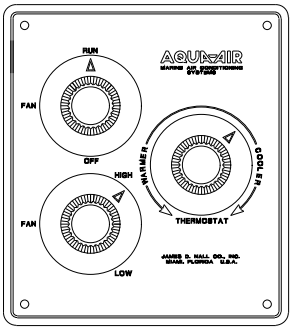

Fig. 1

   This thermostat is mounted in the area to be cooled/heated within 10' of the fan coil so that the air sensing bulb will be in the return air flow.

2. Sapphire digital thermostat . The thermostats main components are:

Display Panel
Control Module
Display Cable
Bezel

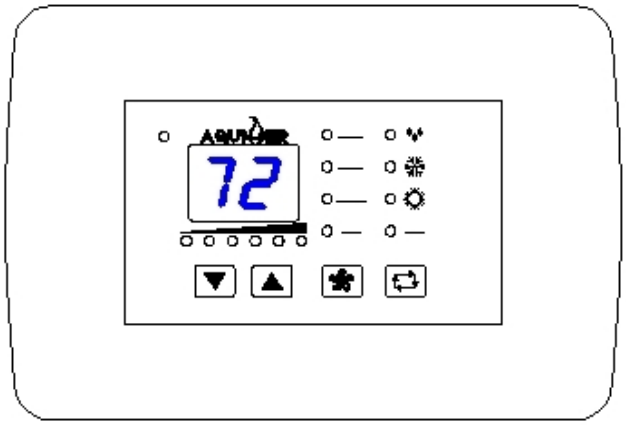

Fig. 2

This thermostat is mounted in the area to be cooled/heated. The control module should be mounted close to the fan coil for ease of connecting the fan motor.

The thermostat is available with Vimar bezel. The display head has an internal air sensor.

D. Seawater Pump

The seawater pump is used to circulate seawater through the condenser on the condensing unit(s). These are all centrifugal pumps and are NOT self priming. This makes it necessary for the pump to be mounted below the ships running water line (under all conditions).

A condensing unit requires approximately 250 GPH (946 LPH) for every 12,000 BTU/H in capacity. Table 1 summarizes the amount of water necessary for a given capacity.

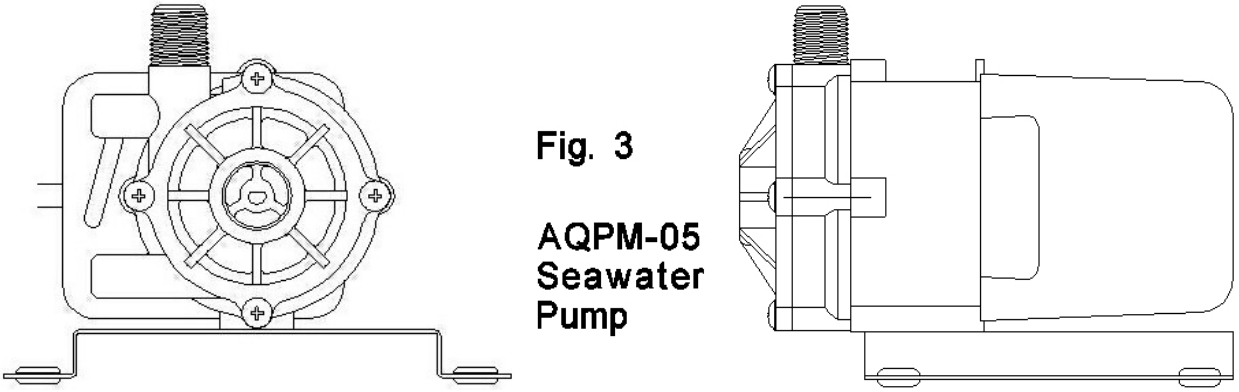

Fig. 3

AQPM-05 Seawater Pump

Condensing Unit Required Seawater Flow Rates		
Unit Capacity, BTU/H	**Seawater Flow in GPH / LPH**	**Seawater Pump**
5,000 to 12,000	250 / 946	AQPM-02
12,001 to 24,000	500 / 1,892	AQPM-05
24,001 to 48,000	1,000 / 3,784	AQPM-10
48,001 to 72,000	1,500 / 5,677	CD100B-36-03C
72,001 to 144,000	3,000 / 11,353	CD100B-40-05C

Table 1

E. Pump Relays

A pump relay is necessary when two or more condensing units are supplied water from a single seawater pump.

The AQP6R relay is a solid state module which will control a single seawater pump from as many as six separate condensing units. This relay requires an external power source. Because it is solid state it is ignition protected.

F. Ducting, Grilles & Transition Boxes

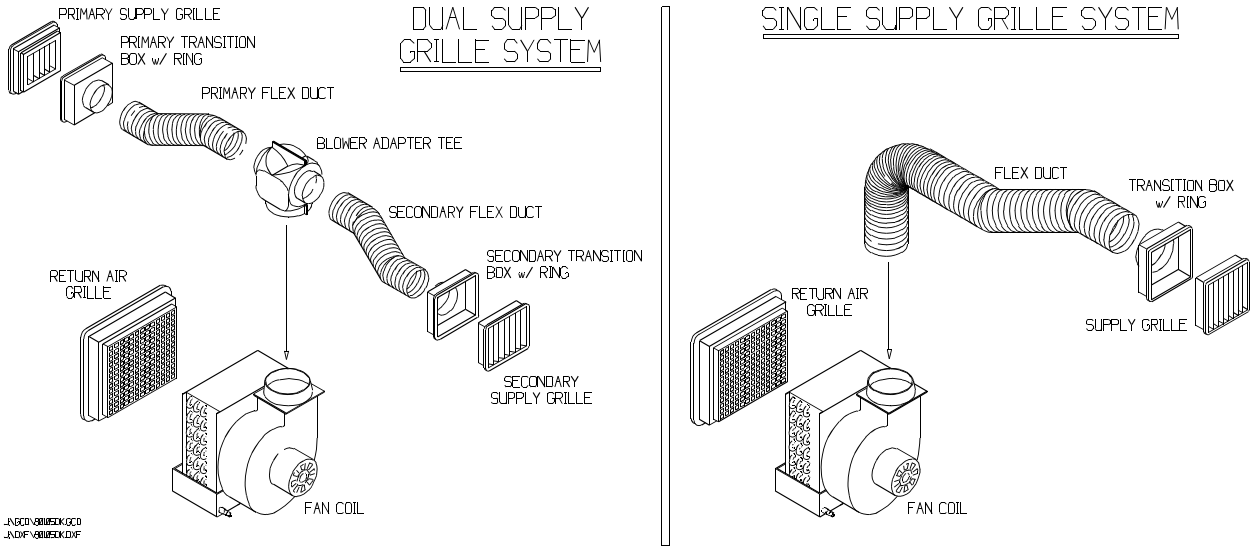

Figure 5 Duct Kit Components

To transfer the air flow from the fan coil to the area that you want to heat or cool you will need insulated flex duct, supply and return grilles, grille to flex duct transition boxes and possibly adapter tees. These items can be purchased in kit form from Aqua-Air®. We offer the Economy Duct Kit series (DKE) which includes plastic grilles or the Premium Duct Kit series (DKP) which includes wood (teak) framed grilles.

A complete description of the duct kits is available in the DK Series Grille & Duct Kit brochure, # 81890.

G. Seawater Kits

All of the components necessary to install the seawater circuit (except the seawater pump itself) are included in a seawater kit. There are two kits available:

1. SWK-05 Seawater Kit for use with the AQPM-02 pump and a 5,000 BTU/H condensing unit.
2. SWKU Seawater Kit for use with the AQPM-02, 05 and 10 pumps and a single 7-24,000 BTU/H condensing unit.

Included in the kits are a seawater inlet thru hull with a speed scoop, ball valve, seawater strainer, overboard thru hull, 25' of hose, hose clamps and necessary PVC fittings to complete the average installation. See Aqua-Air® brochure “Seawater Kits / SWK Series” #80625 for a complete description of all of the components included in these kits.

H. Refrigerant Line Sets

A refrigerant line set is comprised of the following components:

1. Seamless, refrigerant grade, soft copper tubing
2. Tubing insulation
3. Wire
4. Flare nuts

Each line set is shipped in the length requested with the tubing insulation and flare nuts installed. If wire (either 14/3 or 6 conductor) is to be included it is bundled along with the tubing.

Condensing Unit Refrigerant Line Set Sizes			
Unit Capacity, BTU/H	**Suction Line**	**Liquid Line**	**Line Set Series**
5-12,000	3/8"	1/4"	LS12
16,000	1/2"	1/4"	LS16
20-24,000	1/2"	3/8"	LS24
30-36,000	3/4"	3/8"	LS36

Table 2

The LS series line set kits are available in a basic 10' length with 5' extensions up to a maximum total length of 50'.

I. Basic Theory of System Operation

Cooling Mode

Refrigerant is pumped from the condensing unit compressor as a high pressure, high temperature gas through the reversing valve to the seawater condenser. In the seawater condenser, the gas gives up (rejects) the heat acquired during compression and from the system load to the seawater passing through the condenser. As this heat is rejected to the water the gas changes state from a gas to a liquid. This liquid then passes through the condensing unit liquid line base valve to the refrigerant line set. The refrigerant line set then transports the liquid refrigerant to the fan coil capillary tube(s). The liquid refrigerant passes through capillary tube(s) where it experiences a decrease in pressure. As the lower pressure liquid refrigerant exits the capillary tube into the evaporator it begins to absorb the heat contained in the air that is drawn (or blown) across the evaporator by the squirrel cage blower (or propeller fan), thereby 'cooling' the air that is then blown into the room. As the refrigerant absorbs the heat from the air it begins to change state from a liquid back to a gas. This gas then passes back to the condensing unit through the refrigerant line set to the condensing unit suction base valve. It then passes through the the reversing valve and the suction accumulator back to the compressor where the cycle begins again.

Heating Mode

In the heating mode the reversing valve solenoid is energized by the thermostat and the solenoid changes position. This causes the flow of refrigerant to change (reverse). The evaporator in the fan coil is now the heat exchanger to reject the heat of the unit and the seawater condenser is used as the evaporator to absorb the heat that is available in the seawater. The hot gas from the compressor is pumped through the reversing valve to the condensing unit base valve. It is then transported to the evaporator coil (which now is acting as the refrigerant condenser) by the refrigerant line set. Air is drawn (or blown) across the evaporator coil and then blown into the room, producing the desired heating effect. As the refrigerant releases this heat to the air it changes state from a gas to a liquid refrigerant. Upon exiting the evaporator (condenser) the refrigerant passes through the capillary tube(s) where a drop in refrigerant pressure occurs. The liquid/gas mixture then passes through the refrigerant line set to the condensing unit base valve and into the condenser (which is now acting as the refrigerant evaporator). Here, the liquid refrigerant begins to absorb the heat of the water that is passing through the condenser (evaporator). As it absorbs this heat it begins to change state from a liquid to a gas. This gas then passes through the reversing valve and then the suction accumulator on its way back to the compressor where the cycle begins again.

The refrigerant circuits for cooling and heating are shown in Figure 6.

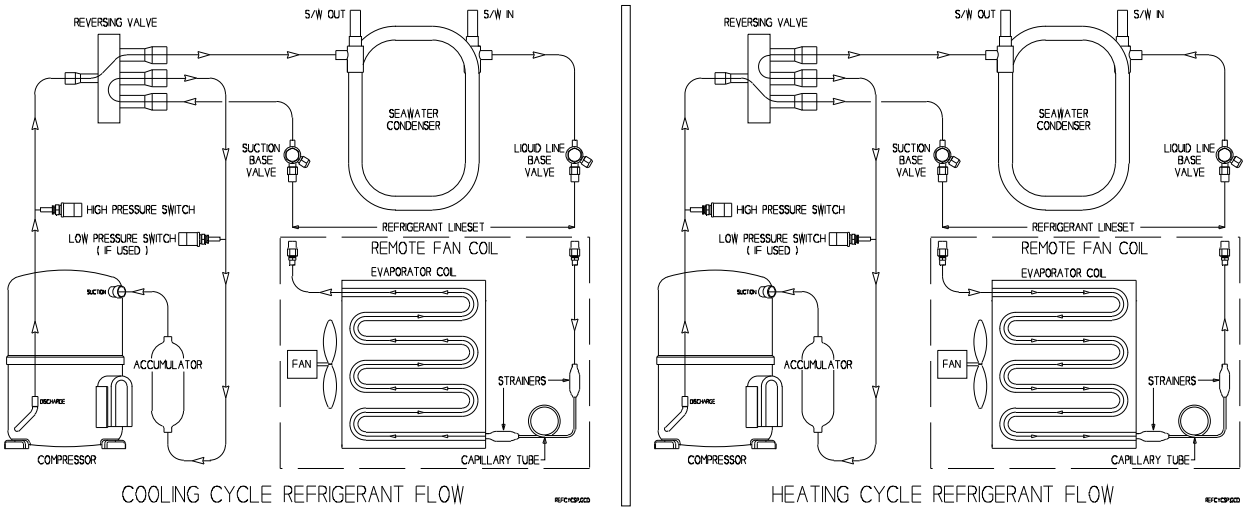

Figure 6 System Refrigerant Flow Diagram

III Installation of Basic Components

★ ★ ★ WARNING ★ ★ ★

FAILURE TO COMPLY WITH THE INSTALLATION INSTRUCTIONS CONTAINED IN THIS MANUAL COULD PRODUCE HAZARDOUS CONDITIONS RESULTING IN THE INJURY OR DEATH OF THE OCCUPANTS AND THE DESTRUCTION OF THE BOAT. MAKE SURE THAT THE WARNINGS ON THE LAST PAGE OF THE MANUAL ARE FULLY UNDERSTOOD AND FOLLOWED.

ALL INSTALLATION TECHNIQUES SHOULD COMPLY WITH THE ABYC "STANDARDS FOR RECOMMENDED PRACTICES FOR SMALL CRAFT" SECTION A-6 and E-8.

IF THERE ARE ANY PARTS OF THIS MANUAL THAT ARE NOT CLEAR PLEASE CONTACT Aqua-Air® FOR FURTHER ASSISTANCE.

★ ★ ★ ★ ★

A. Fan Coils

Fan coils are ideally suited for installations in closets, under bunks or seats.

THEY SHOULD NEVER BE MOUNTED IN THE ENGINE ROOM OR BILGE AREA WHERE THEY COULD DRAW TOXIC FUMES INTO THE UNIT AND THEN DISCHARGE THEM INTO THE LIVING AREA.

In all applications the fan coil should be installed so that the air discharge is at least three feet above the floor. The best possible location is to have the air discharging at or near the ceiling level. The reason for mounting the air discharge as high as possible is because cold air is denser than ambient air and its natural tendency is to fall to the lowest point in the room after leaving the discharge grille.

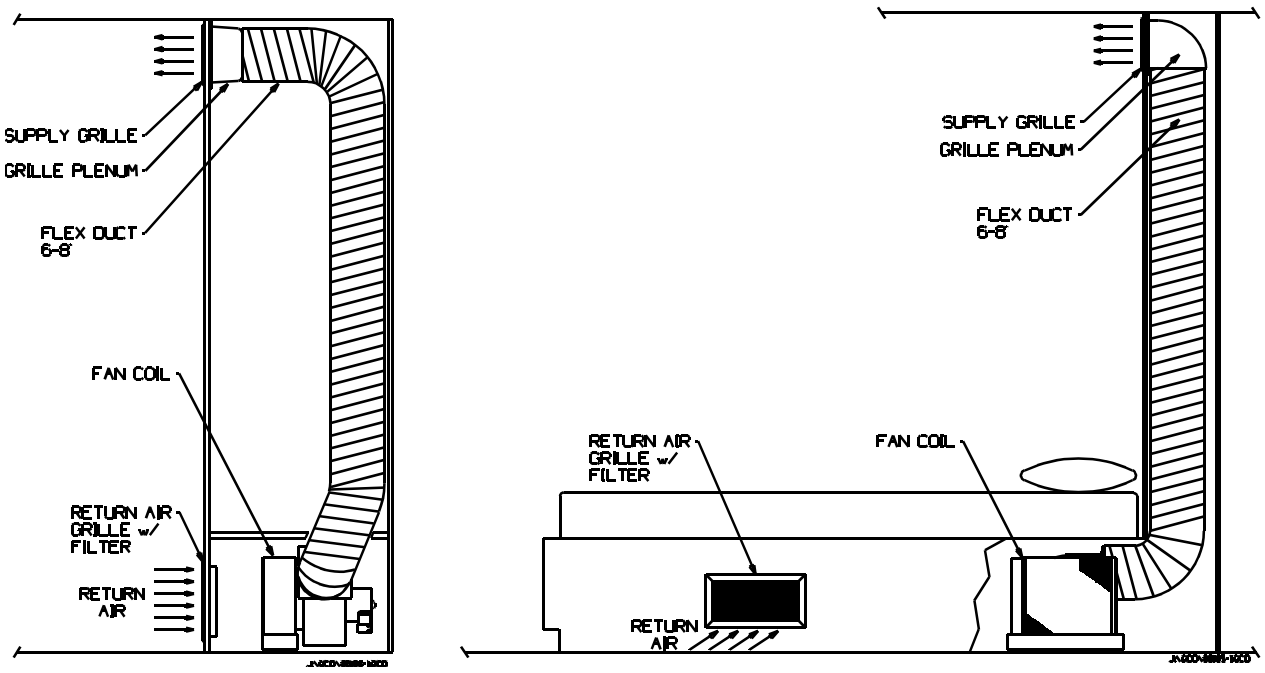

Figure 7 Typical Draw-Thru Fan Coil Installations

The unit must be mounted with the drain pan at the bottom of the unit as condensate from the evaporator is collected here.Each fan coil has two drain fittings that connect into a common tee. The drain line (minimum ½" ID) should be run either overboard or into a shower sump. It is not advisable to run the drain lines into the bilge where the condensate can become stagnant and foul smelling when mixed with seawater. On a hot, humid day several pints of water can be removed from the air by the self contained unit.

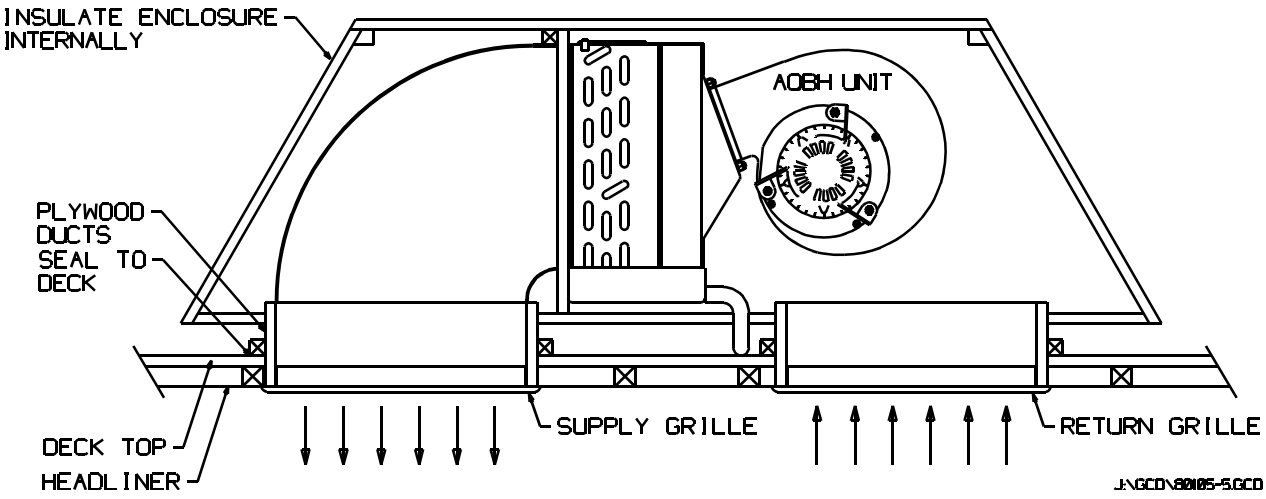

Figure 8 Overhead Blow-thru Fan Coil Installation

Insulated flex duct should be connected to the plastic blower discharge collar by first pulling back about two inches of the insulation on the end of the flex duct that you are going to attach to the blower. Slip the inner duct over the collar so that at least one of the duct reinforcing wires is up against the flat part of the collar. Install three sheet metal screws around the perimeter of the collar to hold the duct in place. Wrap a piece of duct tape around the duct that is on the collar. Slip the duct insulation back over the duct that is attached to the collar and duct tape in place.

The correct minimum grille sizes for each fan coil are shown in Table 2. Return air grilles can be larger than listed (this is one case where bigger is better), however, supply grilles should not be any larger than 25% over the recommended sizes. A supply grille that is too large will not properly disperse the air into the room causing hot spots. In either case the grilles must NOT be any smaller than the minimums listed. Small grilles cause decreases in system performance, fan coil icing or (in the heating mode) unit shut down due to high head pressures.

Minimum Grille and Flex Duct Sizes

Model Number	Supply Grille in^2 / cm^2	Return Grille in^2 / cm^2	Minimum Duct Diameter, in/mm
AQO-04,5	32 / 206	64 / 412	4" / 100mm
AQO-07,8	40 / 258	72 / 464	5" / 125mm
AQO-10	48 / 309	100 / 645	5" / 125mm
AQO-12 AQOC-12 AQC-12	60 / 387	120 / 774	6" / 150mm
AQO-16 AQOC-16 AQC-16 AQC-16L	72 / 464	144 / 929	6" / 150mm
AQOH-20,24	120 / 774	200 / 1290	8" / 200mm
AQOH-30,36	160 / 1032	288 / 1858	10" / 250mm
AQB-04,5	8" x 8" 20cm x 20cm	64 / 412	NONE
AQB-07,8	8" x 8" 20cm x 20cm	72 / 464	NONE
AQB-10	10" x 10" 25cm x 25cm	100 / 645	NONE
AQB-12 AQBH-12	12" x 12" 30cm x 30cm	120 / 774	NONE

Minimum Grille and Flex Duct Sizes			
Model Number	**Supply Grille in^2 / cm^2**	**Return Grille in^2 / cm^2**	**Minimum Duct Diameter, in/mm**
AQB-16 AQBH-16	12" x 12" 30cm x 30cm	144 / 929	NONE
AQL-12 AQE-12	8" x 16" 20cm x 40cm	120 / 774	NONE
AQL-16 AQE-16	8" x 16" 20cm x 40cm	144 / 929	NONE

Table 3

It is very important that there is adequate space for air to return to the fan coil. While the fan coil does not have to be directly behind the return air grille there must be an air path of the same area between the return air grille and the fan coil. Never mount the front of the fan coil any closer than two inches from a bulkhead as this will restrict the air flow into the unit.

A return air filter must be in place on the return air grille. This will prevent dirt and lint from being drawn into the fan coil, reducing performance. The most common type of filter material is an expanded aluminum type. This is the type used on all return air grilles supplied by Aqua-Air® that have return air filters. These filters should be checked on a monthly basis, during normal usage, and cleaned as necessary.

WARNING

TO AVOID AN ELECTRICAL SHOCK FROM A PIECE OF EQUIPMENT THAT HAS DEVELOPED AN INTERNAL SHORT ALWAYS GROUND ANY AQUA-AIR® SYSTEM IN THE MANNER DESCRIBED BELOW:

1. USE SUITABLE SIZED WIRE (SEE TABLE 4) WITH A GROUND WIRE TO FEED POWER TO:
   a. AQS1 or AQS3 SERIES THERMOSTAT or
   b. SAPPHIRE THERMOSTAT or
   c. CONDENSING UNIT EQUIPPED WITH A SAPPHIRE or
   d. CONDENSING UNIT WITH INTERNAL POWER RELAY
2. MAKE SURE THAT THE GROUND WIRE IS CONNECTED ON THE OTHER END AT THE CIRCUIT BREAKER PANEL.
3. CONNECT A GROUND WIRE FROM THE FAN COIL(S) TO THE THERMOSTAT GROUND LUG.
4. CONNECT A GROUND WIRE FROM THE SEAWATER PUMP TO THE GROUND LUG ON THE CONDENSING UNIT OR PUMP RELAY
5. CONNECT A GROUND WIRE BETWEEN THE PUMP RELAY (IF USED) AND CONDENSING UNIT GROUND LUG.
6. CONNECT A BONDING STRAP BETWEEN THE CONDENSING UNIT GROUND LUG AND THE SHIPS BONDING SYSTEM.
7. CHECK FOR CONTINUITY BETWEEN ALL OF THE ABOVE POINTS.
8. USE CORRECTLY SIZED WIRE TERMINALS FOR ALL CONNECTIONS. USE ONLY WIRE CRIMPING TOOLS THAT ARE MANUFACTURER APPROVED FOR THE WIRE TERMINALS USED.
9. ALL WIRING SHOULD COMPLY WITH THE ABYC “STANDARDS FOR RECOMMENDED PRACTICES FOR SMALL CRAFT” SECTION E-8.

FAILURE TO COMPLY WITH THE ABOVE INSTRUCTIONS CAN RESULT IN SERIOUS INJURY OR DEATH

B. Condensing Units

The Aqua-Air® condensing units are designed for installation in almost any area of the boat. They are unaffected by moisture, vibration or ambient temperatures up to 140° F (60°C). They should not, however, be installed in a location where they will be sprayed with seawater (such as under an engineroom air inlet). They are also designed to withstand the severe jolts that can be encountered by a boat when it is in a heavy sea. All of the refrigerant components are hermetically sealed.

The condensing units can be installed wherever there is sufficient space. Install the unit in a location where it is easily accessible for service. The plywood base that is at the bottom of the unit is not a shipping base. It is meant to stay on the unit to provide a means of securely fastening the unit down to whatever surface it is mounted on. Use a minimum of four screws to hold the unit in place. It should be fastened in such a way as to allow easy removal in case service is needed at a later date.

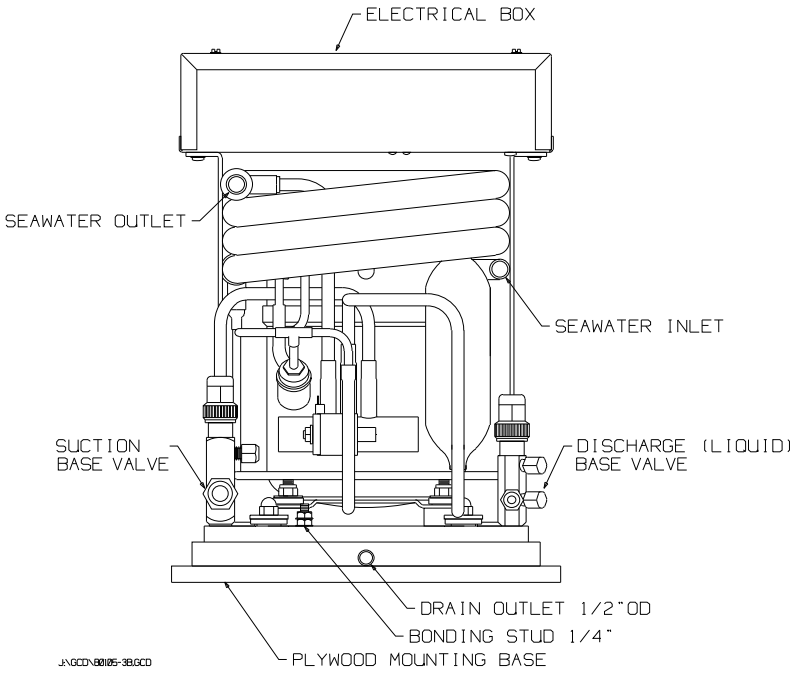

Figure 9 Typical Condensing Unit

The condensing unit is connected to the seawater hoses coming from the seawater pump and going to the seawater overboard fitting. The hose should be (at a minimum) 5/8" ID, single braid hose. Insert the hoses on the seawater condenser tubes a minimum of 1-1/2" and clamp in place with a stainless steel hose clamp.

Connect a drain hose to the drain pan connection on the front of the condensing unit. This drain hose can then be run into a shower sump or overboard.

Connect the wiring from the condensing unit to the fan coil, thermostat, pump and/or pump relay and circuit breaker panel (when applicable) according to the correct wiring diagram for the system. Verify that all components are properly grounded and bonded.

C. Refrigerant Line Sets

When installing the connecting copper tubing between the condensing unit and the fan coil(s) several things must be kept in mind. The only type of copper tubing to use is refrigerant grade seamless soft copper. The maximum length of any line set is 50' (15.2m). The lines can be run in any manner i.e. up, down or at an angle. Try to avoid sharp bends as the tubing kinks easily.

Insulate both lines (suction and liquid) on reverse cycle systems and the suction line only on cooling only systems. Both refrigerant lines should never be insulated together in the same piece of insulation. When putting insulation on the copper lines tape the ends over to prevent anything that is in the inside of the insulation from entering the copper line. While running the lines throughout the boat the ends should remain taped over to prevent debris from entering the lines. All of the joints where the insulation meets should be taped to seal these joints. This will prevent condensation from forming on the outside of the line set.

The connections at the condensing unit and fan coil are made using flare fittings. These connections must be made with the greatest of care. The flare fittings that are used are of the 45° single flare type. Double flares are not compatible with this type of flare joint and should never be used. When the flare is properly made it should be large enough in diameter to fill the inside of the flare nut.

D. Flaring Copper Tubing

Following is the accepted procedure for flaring copper refrigeration tubing for use with 45° refrigeration flare fittings:

1. Use a copper tube tubing cutter to get a good square cut on the end of the tubing to be flared. Never cut the tubing with a hacksaw.
2. Ream the inside of the tube to remove any burrs. Make sure that none of the copper filings fall inside of the tube.
3. Place the flare nut on the tube with the threaded end of the flare nut facing the end of the tubing to be flared.
4. Insert the tubing in the flaring block as shown in Figure 10. The tubing should extend no more than 1/3 of the depth of the flare block flare. If too much tubing extends above the block then the flare will be too large and

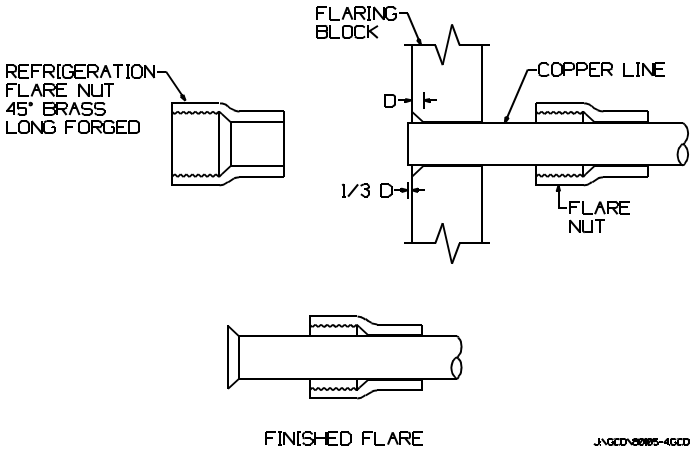

Figure 10 Flaring Copper Tubing

the flared tube will not fit into the flare nut. If not enough tubing extends above the block then the flare will be too small and will be squeezed out of the flare upon tightening causing the connection to leak refrigerant.

5. To form the flare place a drop of refrigerant oil (no other type of oil is acceptable) on the end of the flaring tool spinner. Turn the spinner into the tube three quarters of a turn then back one quarter. Continue this until the spinner will no longer turn.
6. Remove the flaring block and pull the flare nut up and over the flared end of the copper tubing. Verify that the flare fills the interior flared portion of the flare nut.

E. Thermostats

1. AQS1 and AQS3 Series Thermostat / Switch Assemblies

The thermostat switch assembly is the central distribution point for the split system electrical power.

The control panel should be mounted over a suitably sized hole (see templates in the back of the manual) using four screws. The plastic cover for the rear of the control must be installed to prevent someone from accidentally touching the exposed electrical connections.

The wires extending from the back of the control panel end in a terminal strip which should be securely mounted. After all of the wiring is completed, the covers that were supplied with the control panel (one for the terminal strip and one for the back of the control) must be installed.

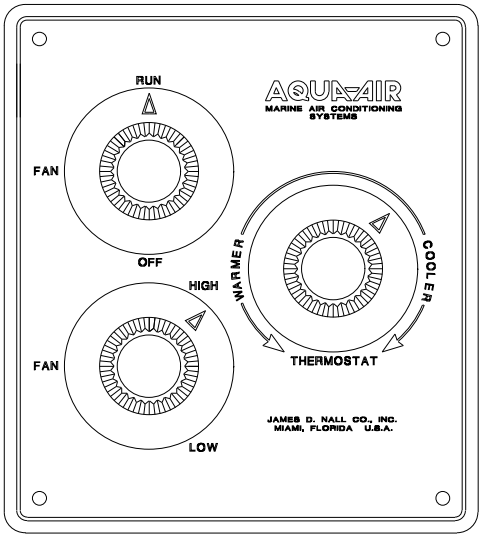

Fig. 11

AQS3 Series Thermostat

The copper temperature sensing bulb must be mounted in the return air flow to the fan coil. There are two plastic clips on the face of the fan coil that are specifically for mounting this sensor. The sensing bulb must never be mounted with the bulb in direct contact with the fan coil. The bulb should not be mounted on a surface that would be warmer than the surrounding air (i.e. an engine room bulkhead or the hull side).

2. Sapphire TSV Digital Thermostat

The display panel should be mounted over a suitably sized hole (see templates in the back of the manual).

The display head should not be mounted in an area that is exposed to direct sunlight or other heat sources as this will affect the air temperature sensor that is mounted in the display head.

The control module box should be mounted close to the fan coil so that the fan motor wire can easily be attached to the control module terminal block.

All wiring connections for the unit will be made on the terminal strip inside the control module box. Connect the fan coil motor wire to the control module box. Replace the control module cover after wiring.

Install the display cable phone wire connecting the display panel to the control module box.

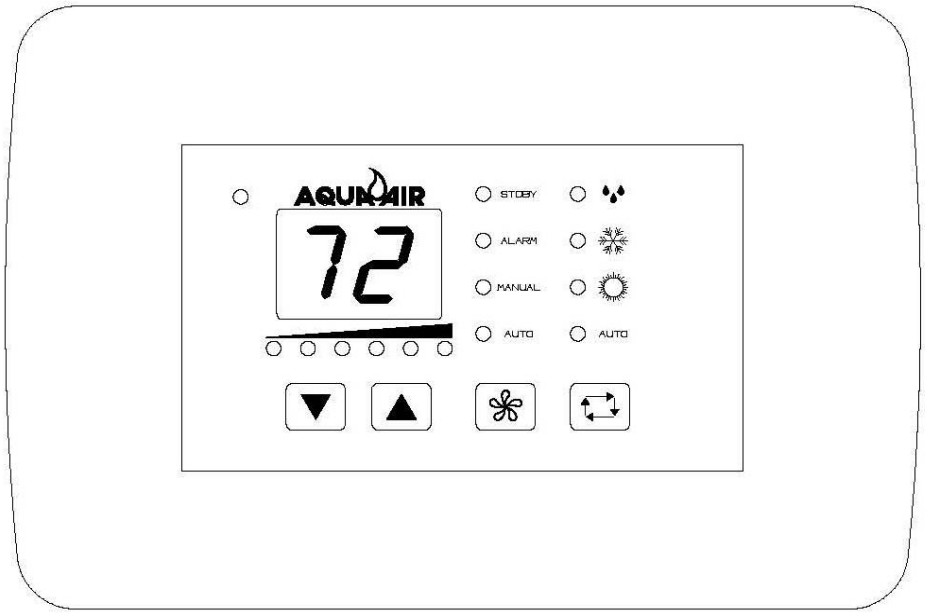

Figure 12

TSV Digital Thermostat Display Head with Vimar Bezel

Recommended Wire and Circuit Breaker Sizes			
Unit Capacity BTU/H	**Voltage**	**Wire Size AWG**	**Circuit Breaker Rating, Amps**
5,000	115	14	10
7,000	115	14	15
10,000	115	12	20
12,000	115	12	20
16,000	115	10	30
7,000	230	14	10
10,000	230	12	15
12,000	230	12	15
16,000	230	12	20
20,000	230	12	20
24,000	230	12	20
30,000	230	10	30
36,000	230	10	30

Table 4

F. Seawater Pumps

The seawater pumps supplied by Aqua-Air® are all centrifugal, non-self priming pumps. They must be installed in the following manner:

1. The pump must be mounted securely at a point in the hull that is beneath the waterline of the boat under ALL conditions (at rest, under way or in a heavy sea). The position of the pump should be as close as possible to the centerline of the boat, no further forward than the front of the engine compartment and no further aft than the propeller stuffing boxes or aft engine compartment bulkhead. Mount the pump as low as possible in the hull. The pump should always be mounted in a horizontal position and never on its head or end. See Figure 13 below.

Fig. 13

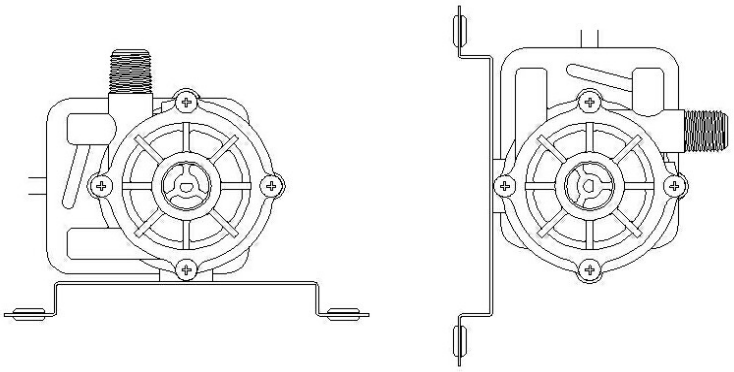

2. To make the system self purging there must be a steady uphill run from the seawater inlet to the seawater strainer through the pump up to the condensing unit and then overboard (See Figure 14). This will allow any air that enters the seawater inlet to bleed off naturally through the seawater system.

3. Connect the pump wire to the condensing unit according to the applicable wiring diagram. The ground wire must be connected to the green ground lug.

4. On a system with more than one condensing unit connected to a single seawater pump the pump will be wired to the pump relay.

5. The seawater pumps CANNOT be run without a supply of water. If they are run dry internal damage will be caused voiding the pumps warranty.

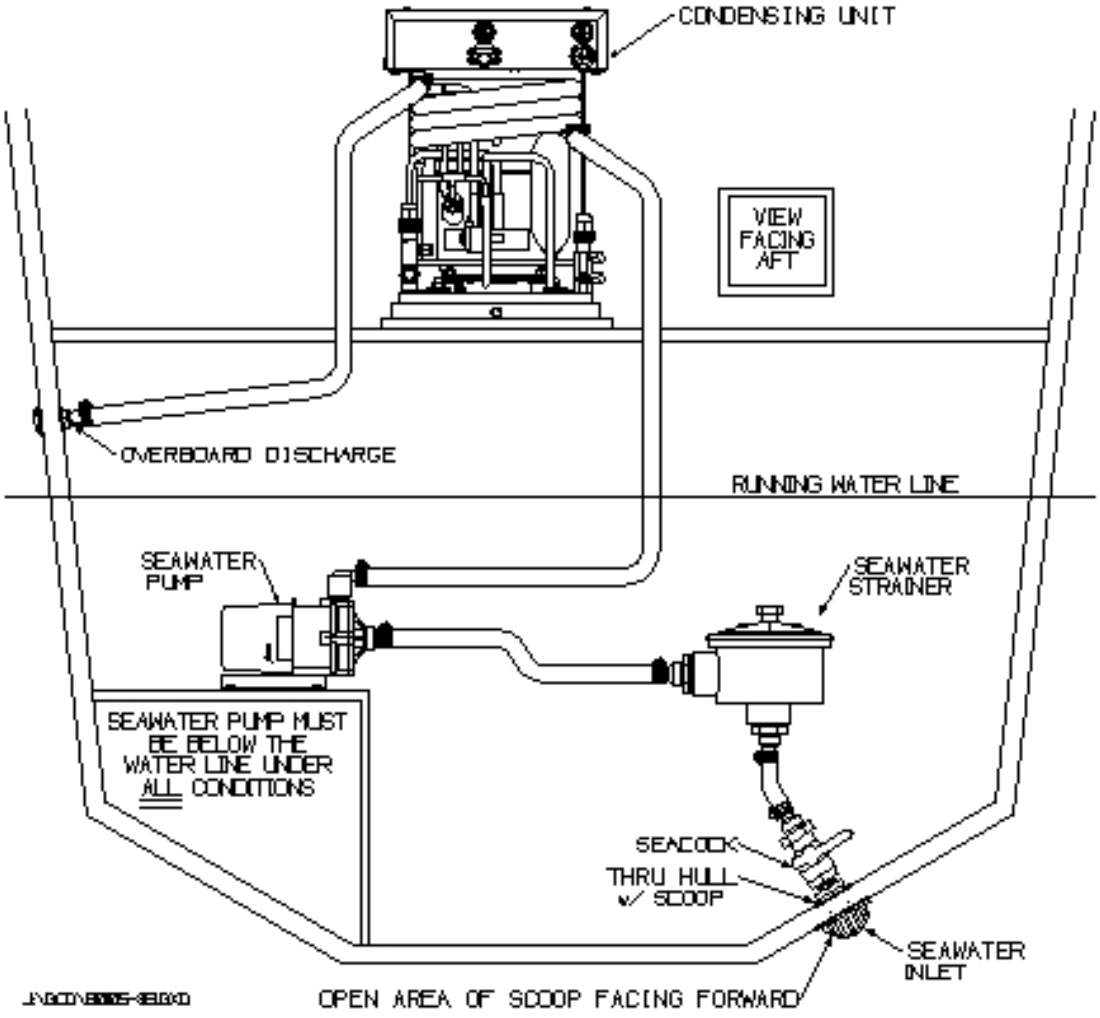

Figure 14 Typical seawater Circuit

IV. Before Starting the System for the First Time

Below is a preliminary check list that should be verified before operating the system for the first time:

1. The fan coil is securely fastened in place.
2. The supply and return air grilles meet the minimum area requirements
3. There is a return air filter installed
4. The insulated duct is installed with a minimum of bends and without any kinks that would restrict the air flow.
5. All electrical covers (either on the thermostat or the condensing unit) are in place.
6. The thermostat temperature sensing bulb or sensor is in the return air flow but not touching the evaporator coil or housing.
7. The fan coil drain pan is draining properly. This can be checked by pouring water into the pan and verifying that it drains.
8. All wire harnesses or phone wires connecting the thermostat or display head are properly connected to the unit or the control module box.
9. The flare joints on the condensing unit and fan coil have been made according to the Aqua-Air® instructions
10. The pump and/or pump relay wires are correctly connected to the condensing unit.
11. The electrical power line from the ship's distribution panel is properly connected to the thermostat (AQS1 or AQS3 or Sapphire) or to the condensing unit according to the applicable wiring schematic for the equipment used. Make sure that a time delay type circuit breaker is used.
12. The copper refrigerant lines connecting the condensing unit to the fan coil unit are properly insulated and sealed. The line set should be fastened every 18" (.5m) throughout the vessel.
13. The condensing unit is securely fastened down and is accessible for service.
14. The flare nuts on the fan coil are insulated. This should be done after checking the system for leaks.
15. The seawater system is piped in the recommended way so as to be self purging of air.
16. The pump is mounted well below the waterline of the boat.
17. There should be a properly sized seawater strainer between the seawater inlet and the pump.
18. The seawater inlet is a scoop type with the open portion of the scoop facing forward.
19. There should be a separate overboard fitting for each condensing unit. It should be mounted no more than 2" above the waterline.
20. The seawater inlet should be no further than 6" from the centerline of the boat.

V. System Leak Checking & Charging

The following instructions should be used when initially leak checking and charging the Aqua-Air® Direct Expansion Split System with Refrigerant 22 and 407C.

★★★ WARNING ★★★

Title VI of the EPA Clean Air Act, Section 608.c.1 states the following:

"Effective July 1, 1992, it shall be unlawful for any person, in the course of maintaining, servicing, repairing, or disposing of an appliance or industrial process refrigeration, to knowingly vent or otherwise knowingly release or dispose of any Class I or Class II substance used as a refrigerant in such appliance (or industrial process refrigeration) in a manner which permits such substance to enter the environment. De minimis releases associated with good faith attempts to recapture and recycle or safely dispose of any such substance shall not be subject to the prohibition set forth in the preceding sentence."

Personnel handling Refrigerant 22 and 407C(which is classified as a Class II substance) must be EPA certified and must use EPA approved refrigerant recovery equipment.

In the past it was an accepted practice to use the refrigerant contained inside the condensing unit to purge the air from the refrigerant line sets. This is no longer legal and is not recommended by Aqua-Air®. The only acceptable means of purging the refrigerant line sets and charging the unit with refrigerant are outlined below. Any deviation from these procedures can result in Federal prosecution for the illegal venting of refrigerants.

★★★ WARNING ★★★

The condensing unit is shipped with an initial refrigerant charge sufficient for approximately a 30' (10m) line set. The fan coils are shipped with a dry nitrogen charge. The refrigerant line sets that you have installed currently have air in them.

The first procedure you will perform is to evacuate the line set and fan coil of all air and its inherent moisture content. At the same time you will be checking the integrity of the refrigerant flare connections that you have made at the condensing unit and fan coil(s).

The second procedure is the actual release of the refrigerant that is contained in the condensing unit into the system.

To perform these procedures you will need the following tools:

1. Four valve refrigeration charging manifold with check valve type self sealing refrigerant hoses.
2. Vacuum pump capable of evacuation down to at least 25 microns.
3. Ratchet wrench with a 1/4" square opening
4. 9/16" box wrench
5. Adjustable wrench
6. Thermometer
7. Can of Refrigerant 22 or 407C (usually a standard 30 or 50 pound drum)

A. Leak Checking the System

1. Verify that the flare connections at the condensing unit base valves, at the fan coil(s) and any refrigerant tee's that are in the refrigerant line sets are all tight.
2. Using the 9/16" box wrench remove the lower charging port brass cap on the liquid line base valve.
3. Attach the suction gauge hose (usually the blue hose) from the refrigeration gauge manifold set to the charging port. See Fig. 15
4. Attach the vacuum hose from the refrigeration gauge manifold set to the vacuum pump.

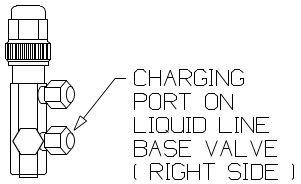

Fig. 15

5. Attach the refrigerant hose from the refrigeration gauge manifold set to the can of refrigerant. The valve on the refrigerant can should remain in the OFF (counter clockwise) position.
6. Verify that all hose connections are tight
7. Turn the vacuum pump on and fully open both the vacuum valve and the refrigerant valve on the refrigeration gauge manifold set.
8. Allow the vacuum pump to run until the suction gauge indicates the system has pulled down to at least 28 in. Hg.
9. Close both the vacuum valve and the refrigerant valve on the refrigeration gauge manifold set. Note the exact reading on the suction gauge.
10. Allow the system to sit for 15 minutes and then verify that the suction gauge pressure has not increased which would indicate a leak. If the gauge pressure has increased check all of the flare connections again and return to step 6 of this procedure. Once the system will hold the vacuum for the 15 minutes proceed to the next step.
11. Continue to evacuate the system down to at least 29.5 in Hg. and then close the vacuum valve on the refrigeration gauge manifold set. Allow the system to sit for an hour and then verify that the pressure has not risen. If it has risen then there is a leak. Check the flare fittings again and tighten or re-flare as necessary and return to step 6. If the pressure has not risen continue on to the next step.
12. With the refrigerant tank upright (so that you are getting refrigerant gas and not liquid) open the tank valve which will allow refrigerant to enter the line set and the fan coil. Keep the valve open until the suction gauge indicates a pressure of 0 psig then close the refrigerant tank valve.
13. Remove the suction gauge hose from the charging port and replace the brass cap on the port. Tighten the cap with the 9/16" box wrench.

14. Remove the valve stem caps from the top of both base valves with an adjustable wrench.
15. Using the ratchet wrench fully backseat (turn counterclockwise) the valve stems on both base valves. This allows the refrigerant that was stored in the condensing unit to enter the refrigerant line set and fan coil.
16. Replace and tighten the valve stem covers with the adjustable wrench.

The system is now ready to be run to verify that the refrigerant charge is correct.

B. Charging the System

1. Remove the charging port cap on the condensing unit suction base valve and the upper charging port on the liquid line base valve with the 9/16" box wrench.
2. Attach the suction gauge hose (usually the blue hose) from the refrigeration gauge manifold set to the suction base valve charging port.
3. Attach the discharge gauge hose (usually the red hose) from the refrigeration gauge manifold set to the liquid line base valve upper charging port.
4. Verify that all of the valves on the refrigeration gauge manifold set are in the closed (clockwise) position.
5. Attach the refrigerant hose from the refrigeration gauge manifold set to the refrigerant tank (this may already be done if continuing from the leak check procedure).
6. Remove the valve stem caps from the top of both base valves with an adjustable wrench.
7. Frontseat (turn clockwise) both valve stems one full turn. This will allow pressure to enter the refrigeration gauge manifold set.
8. Using the thermometer measure the following:
    1. Room temperature that the fan coil is serving
    2. Seawater temperature
9. Using the charging tables provided verify that the refrigerant pressures fall within ± 10% of the values on the chart.
10. If the suction refrigerant pressure is low add refrigerant to the system. If they are within the normal parameters then go to step 14.
11. To add refrigerant to the system first open the valve on the refrigerant tank and verify that the tank is in the upright position. This will insure that only refrigerant gas (and not liquid) is introduced into the system. If you need to remove refrigerant from the system (an overcharge condition) see the separate section titled “ Refrigerant Recovery from the System”.

12. Slowly open the refrigerant valve on the refrigeration gauge manifold set. This will begin to allow refrigerant into the system. Continue to do this at short intervals until the system pressures are within parameters.
13. Once the system is fully charged close the valve on the refrigerant tank and verify that the refrigerant valve on the refrigeration gauge manifold set is closed.
14. Using the ratchet wrench fully backseat (turn counterclockwise) the valve stems on both base valves.
15. Replace the valve stem covers on both base valves and tighten the caps with the adjustable wrench.
16. Remove the charging hoses from both base valves and replace the brass caps on the charging ports. Tighten the caps with the 9/16" box wrench.

C. Recovering Refrigerant from the System

If a situation occurs where the system refrigerant pressures are higher than what is shown on the refrigerant charging charts, refrigerant will have to be removed from the system. This refrigerant CANNOT be directly vented to the atmosphere (see the warning at the beginning of this section). It must be “recovered” using an EPA approved recovery unit and DOT approved refillable recovery cyclinder. As there are numerous types of recovery units available we will not give you an exact recovery procedure. The best thing to do is to follow the procedures set forth by the recovery unit manufacturer for vapor (gas) recovery.

VI. System Operation

B. Systems Using the AQS1 or AQS3 Series Thermostat

1. Verify that the OFF-FAN-RUN switch is in the OFF position.
2. Turn the unit circuit breaker ON.
3. Turn the thermostat to the desired setting (either cooling or heating).
4. Set the fan speed control to HIGH
5. Verify that the seawater inlet valve is ON and the seawater strainer is clean.
6. Turn the OFF-FAN-RUN to the FAN position. This will start the fan motor and seawater pump. Look over the side of the boat and verify that seawater is coming out of the seawater overboard. If it does not after 15 seconds stop the put the OFF-FAN-RUN in the OFF position and find out why there is no seawater flow.
7. Turn the OFF-FAN-RUN switch to the RUN position. The compressor will now start and begin either cooling or heating.

8. To set the thermostat to maintain a certain temperature, turn the thermostat toward the center position until a single click is heard. The thermostat is now set to maintain the current room temperature. To change the room temperature by a few degrees rotate the knob about 1/8" at a time and then wait 15 minutes for the room temperature to adjust.
9. Set the fan speed control to the desired setting. On the heating cycle run the fan on low speed for about 15 minutes and then increase to medium speed. This will allow the unit to build up temperature. In the cooling cycle the fan can be run at any speed. In either mode unit capacity decreases as fan speed decreases.
10. It is not advisable to turn the system on and off rapidly. It is usually a good idea after turning the system off to allow at least five minutes to pass before starting the unit again.
11. To turn the system OFF turn the OFF-FAN-RUN switch to the OFF position.

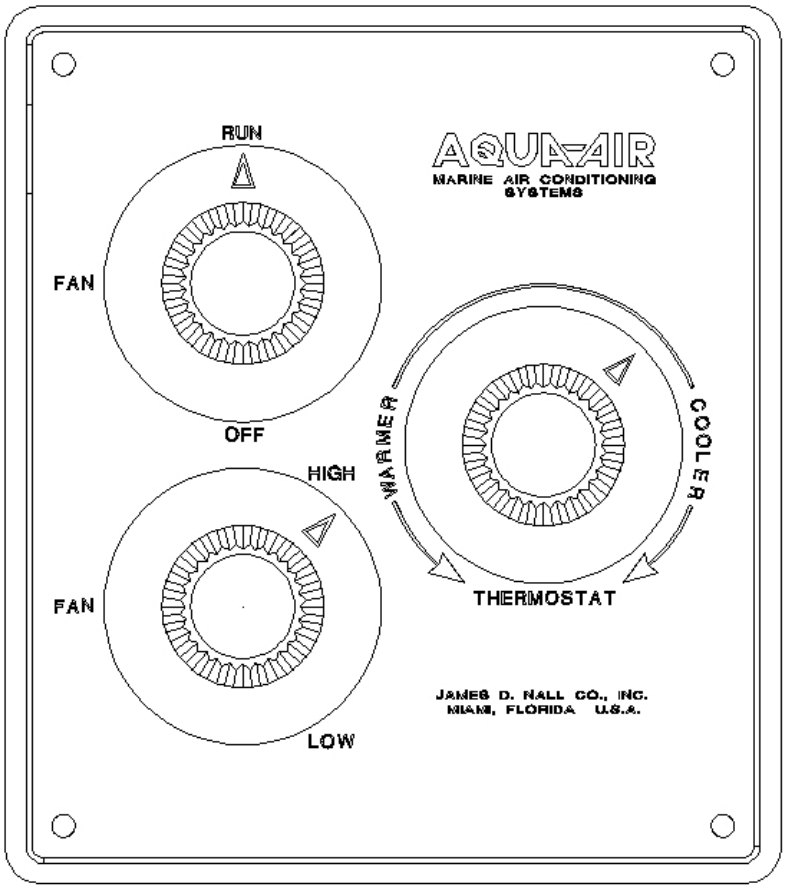

Figure 16
AQS3 Series Mechanical Thermostat Display Panel

B. Systems Using the Sapphire Digital Thermostat

When Starting the System, the following steps should be followed:

1. Verify that the controls are in the OFF position or mode.
2. Open the seacock on the seawater inlet
3. Verify that the seawater strainer is clean and unobstructed
4. Turn on the circuit breaker(s) for the A/C unit, and the pump (if separate circuit breaker is used for a pump connected to a pump).

Continue the start-up according to the following applicable procedure:

TSV DIGITAL CONTROL UNITS:

5. Press the MODE button on the display face. The LED will now indicate the current cabin temperature. This will start the fan motor and seawater pump and compressor. Look over the side of the boat and verify that seawater is flowing from the overboard outlet. If there is no water flow after 15 seconds, press the MODE button to return the unit to the STANDBY mode and find out why there is no seawater flow. The compressor should be on whenever the COMPRESSOR ON light is on.

6. Press and release the MODE button until the desired operation mode is reached (AUTOmatic operation, COOLing only, HEATing only or Dehumidification mode).

7. View the current thermostat set point by momentarily pressing either the ▲ (increase temperature) or ▼ (decrease temperature) keys. To change the set point, continue to press the ▲ or ▼ key until the desired set point is reached. (***The compressor will run when the cabin temperature is above the set point in the COOL mode and below the cabin temperature in the HEAT modes***).

8. Fan speed operation initially is in the AUTO mode. This means that the fan speed will be automatically selected based on how close the cabin temperature is to the set point. To change the Fan mode to MANUAL press the FAN button. To change the fan speed setting, press the FAN key and then the ▲ or ▼ key until the desired fan speed is achieved. ***For further operating information on the TSV Sapphire Control, please refer to the TSV Sapphire Control Operations section of this manual.***

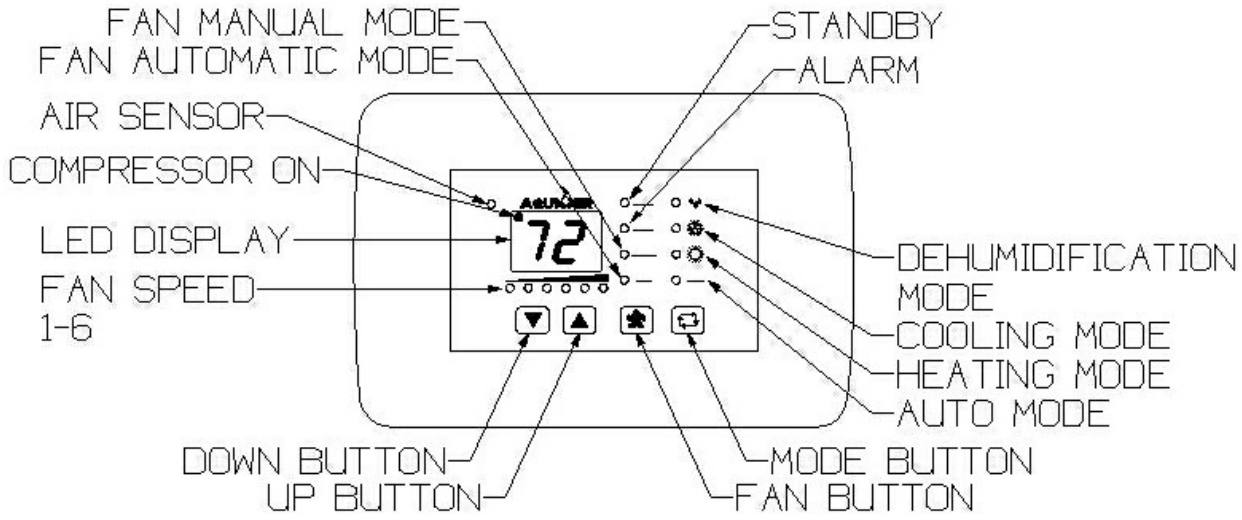

Figure 17
TSV-01 Display Head

C. Reverse Cycle Systems

Most Aqua-Air® units are reverse cycle heat pump units. This type of system derives its heat from the seawater that is pumped through the seawater condenser. When the water temperature reaches 40℉ there is an approximate 50% loss in heating capacity. As the water temperature reaches 35℉ there will be little or no heating available. This should be kept in mind when considering the practicality of a reverse cycle system for the area that you will be operating in during the winter months.

VII Maintenance

A. Fan Coils

1. The fan motors should be lubricated on a yearly basis with SAE 20 oil
2. The drain pans should be checked for proper drainage by pouring a quart of water into the pan. The water should drain within thirty seconds.
3. Clean all return air filters at the beginning of the boating season and then regularly on a monthly (or sooner as use dictates) basis.

B. Seawater System

1. The seawater pump requires no maintenance
2. The seawater strainer should be cleaned at the beginning of the boating season and then regularly on a monthly (or sooner as use dictates) basis.

VIII Winterizing

Condensing Unit.

Turn the seawater inlet off. Remove the seawater hose from the seawater pump outlet. This will allow the water to drain from the unit as long as the system is piped correctly.

Seawater Pump

With the seawater inlet off loosen the screws on the front of the pump. This will allow any water in the pump head to drain.

Seawater Strainer

Drain and clean the strainer

Seawater Inlet

Remove the hose at the inlet valve and remove as much water from the valve as possible.

Seawater Outlet

Remove the hose at the seawater outlet. Install a cap over the fitting to prevent any water from entering the fitting.

★ ★ ★ WARNING ★ ★ ★

Aqua-Air Manufacturing (a division of the James D. Nall Company, Inc.) hereafter referred to as the "Manufacturer" makes the following warnings in regard to the use of its products. Even though these warnings are comprehensive in nature, there are certain dangers that might arise which, at this time, are unforeseeable. A thorough understanding of the dangers outlined below will help as a guide for spotting other potentially dangerous situations. This understanding is very important in assuring your safety.

Electricity

Aqua-Air® products operate on voltages ranging from 24 to 480 volts of alternating current (A.C.) Power. Because of the danger involved with these voltages, all metal components (bases, cabinets, units) must be grounded in some manner to the ship's grounding system. Some of the relays, switches and thermostats used in the Aqua-Air® systems are not ignition protected. Because of this, the ventilation blower on a boat should be run for five minutes prior to and during the operation of any Aqua-Air® product or system. All electrical connections must be sealed or covered in such a way as to prevent contact by unauthorized personnel. Such contact could lead to permanent injury or death.

Electrolysis

Any electrical leakage of a component can cause electrolysis. This could lead to a deterioration of a thru-hull which could cause leakage of water into the boat which could result in sinking the boat. All Aqua-Air® products must be kept clean and dry. They should be periodically inspected for electrical leakage. If detected, the faulty component should either be repaired or replaced.

Refrigerant

Aqua-Air® products utilize either refrigerant 22 or 407C. These refrigerants are non-toxic and non-flammable. This refrigerant contains no oxygen and will therefore not support life. When burned this refrigerant deteriorates into potentially lethal gases. If a refrigerant leak is discovered, evacuate all personnel from the area and prohibit the use of any item using an open flame. Due to the high pressures involved in refrigeration systems, eye protection, gloves and long-sleeved clothes should be worn during servicing of a system. Extensive frost burns can occur to the eyes and skin if they come into contact with liquid refrigerant.

Ventilation

To either cool or heat air, Aqua-Air® systems move air through a heat exchanger by means of either a propeller fan or blower system. This process naturally causes a suction on one side of the unit and a pressurized area on the other. These heat exchangers or "cooling units" as they are referred to in our brochures must be installed so that this suction-pressure action does not (1) pressure an area to the extent of causing structural failure of the area which could cause injury and does not (2) cause a suction in an area where vapors from batteries, fuel or other operating equipment exist. If a cooling unit were installed in this way then these vapors could possibly be discharged into a living space where they could be hazardous. The best way to prevent the introduction of dangerous gases into a living space is to make sure all living spaces are carefully sealed from all other spaces. It is never advisable to completely seal an area without some sort of auxiliary ventilation in the event of lethal gas or fumes escaping from any source.

Condensate

All Aqua-Air® direct expansion cooling units and self contained units produce condensate when operated in the cooling mode. The self contained units and condensing units can produce condensate during operation in the heating mode. This water must be drained overboard. If allowed to drip on a wood, dry rot can form causing structural failure. If allowed to drip on electrical components, deterioration of the components can occur. When the cooling unit is in operation, a negative pressure is exerted on the condensate line. Always locate condensate outlets as far as possible from sources of fumes or dangerous gases. These fumes or gases could be drawn into the system due to this negative pressure resulting in a potentially hazardous situation.

★ ★ ★ WARNING ★ ★ ★

Never sleep in an enclosed area in a boat when any equipment, which functions as a direct result of the combustion of a volatile fuel, is in operation (such as engines, generators, oil-fired heaters, etc.). At any time their exhaust system could fail leading to a build-up of dangerous gases within the enclosed area.

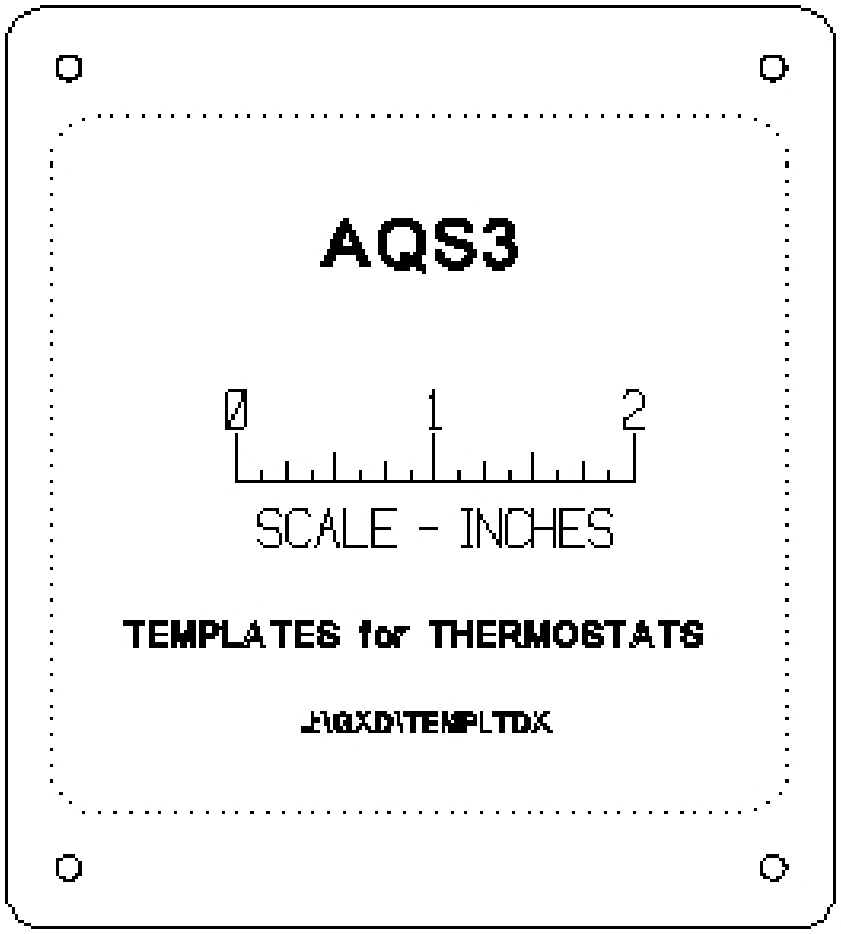
AQS3
0
1
2
SCALE - INCHES
TEMPLATES for THERMOSTATS
J:\QXD\TEMPLTDX

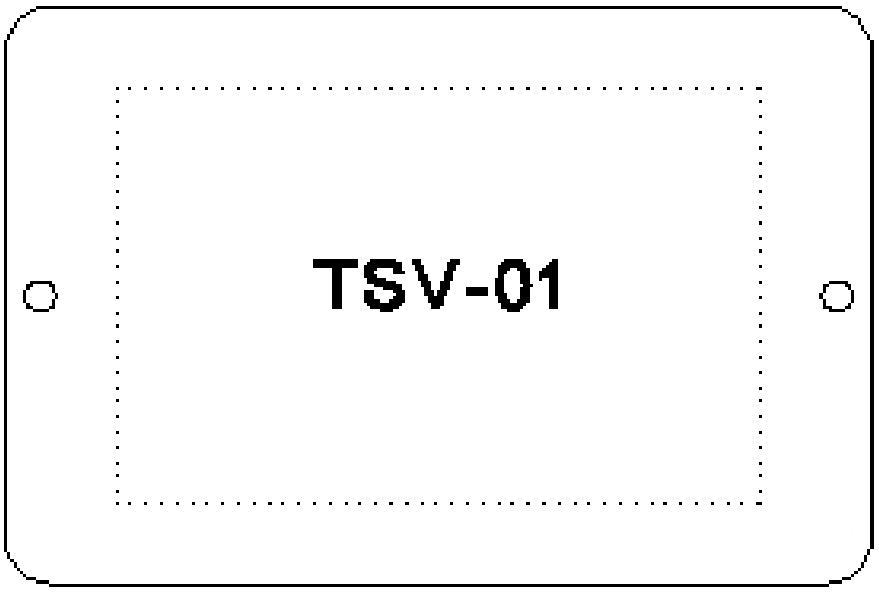
TSV-01

REFRIGERATION CHARGING CHARTS R-22
COOLING CYCLE

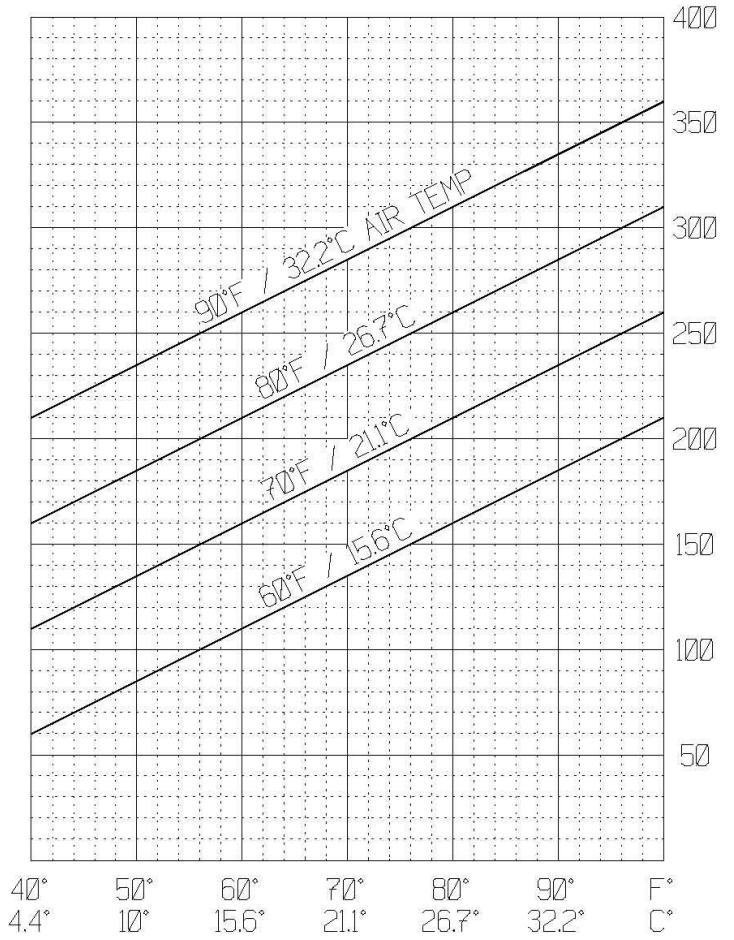

J:\GXD\R22CHRG.GCD

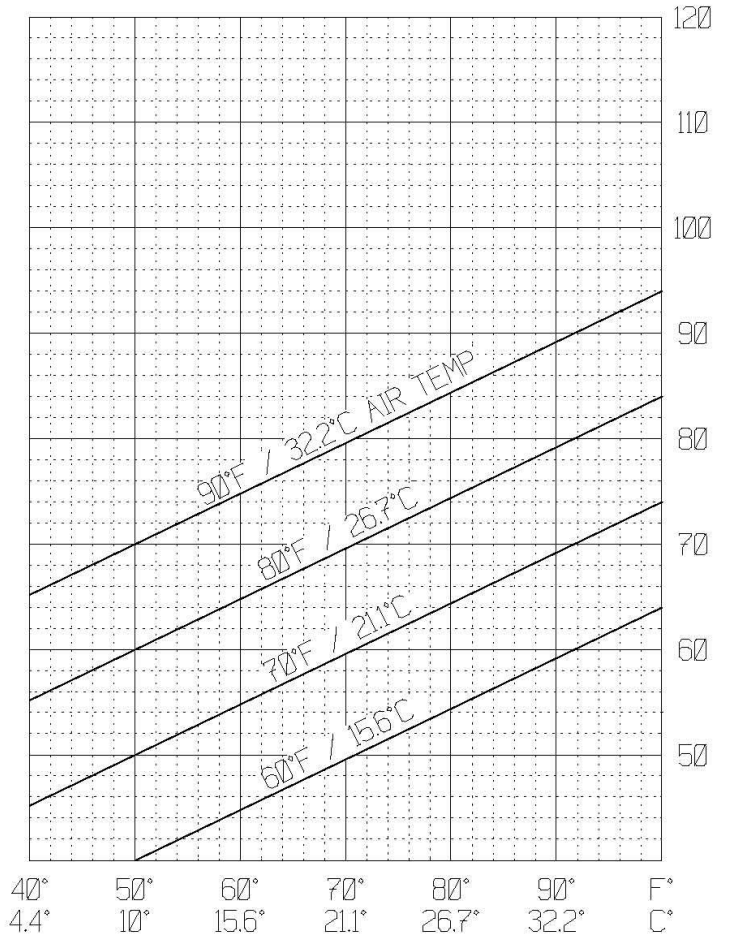

Refrigerant Line Set Sizing

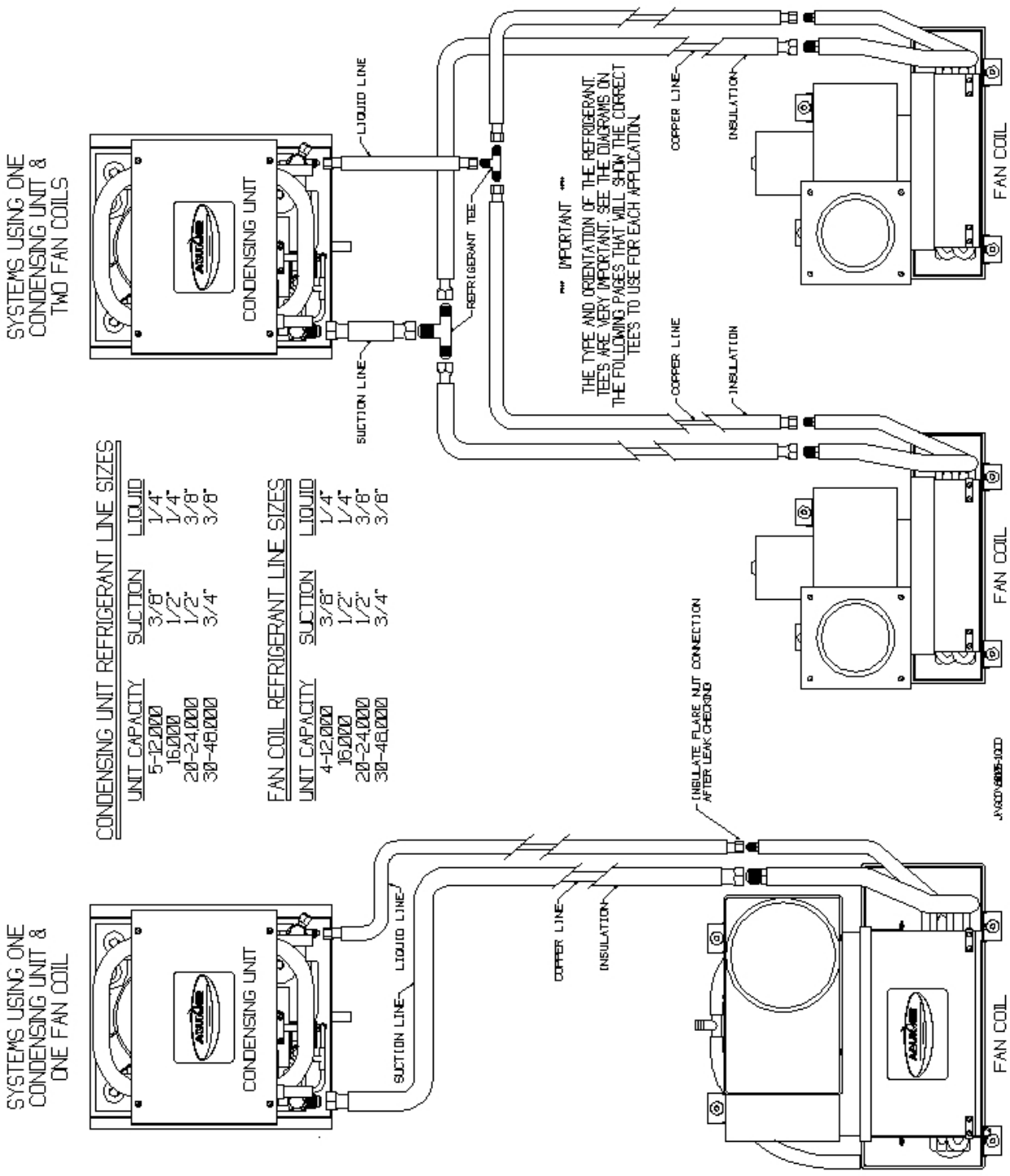

CONDENSING UNIT REFRIGERANT LINE SIZES

UNIT CAPACITY	SUCTION	LIQUID
5-12,000	3/8"	1/4"
16,000	1/2"	1/4"
20-24,000	1/2"	3/8"
30-48,000	3/4"	3/8"

FAN COIL REFRIGERANT LINE SIZES

UNIT CAPACITY	SUCTION	LIQUID
4-12,000	3/8"	1/4"
16,000	1/2"	1/4"
20-24,000	1/2"	3/8"
30-48,000	3/4"	3/8"

Tee Arrangements for Refrigeration Line Sets on Multiple Evaporator Systems

The purpose of this guide is to show some of the recommended line set and refrigeration tee arrangements for different size condensing unit and evaporator combinations.

The important thing to note on multiple evaporator systems is the orientation of the tee's when you have an evaporator capacity mismatch i.e. a 4,000 and 8,000 BTU/H fan coil connected to a 12,000 BTU/H condensing unit (shown below right).

See the drawing on the next page for Diagram A and B.

CONDENSING UNIT	FAN COIL		DIAGRAM	SUCTION LINE TEE				LIQUID LINE TEE			
	1	2		PART NUMBER	A	B	C	PART NUMBER	A	B	C
10,000	5,000	5,000	A	131210-06	3/8"	3/8"	3/8"	131209-04	1/4"	1/4"	1/4"
12,000	7,000	5,000	B	131210-06	3/8"	3/8"	3/8"	131209-04	1/4"	1/4"	1/4"
	8,000	4,000	B	131210-06	3/8"	3/8"	3/8"	131209-04	1/4"	1/4"	1/4"
16,000	8,000	8,000	A	131310-06	3/8"	3/8"	½"	131209-04	1/4"	1/4"	1/4"
	12,000	4,000	B	131310-08	½"	3/8"	3/8"	131209-04	1/4"	1/4"	1/4"
20,000	10,000	10,000	A	131310-06	3/8"	3/8"	½"	131301-04	1/4"	1/4"	3/8"
	12,000	8,000	B	131310-08	½"	3/8"	3/8"	131301-06	3/8"	1/4"	1/4"
	16,000	4,000	B	131311-13	½"	½"	3/8"	131301-06	3/8"	1/4"	1/4"
24,000	12,000	12,000	A	131310-06	3/8"	3/8"	½"	131301-04	1/4"	1/4"	3/8"
	16,000	8,000	B	131311-13	½"	½"	3/8"	131301-06	3/8"	1/4"	1/4"
	20,000	4,000	B	131311-13	½"	½"	3/8"	131310-04	3/8"	3/8"	1/4"
30,000	20,000	10,000	B	131312-01	3/4"	½"	3/8"	131310-04	3/8"	3/8"	1/4"
36,000	20,000	16,000	B	131311-12	3/4"	½"	½"	131310-04	3/8"	3/8"	1/4"
	24,000	12,000	B	131312-01	3/4"	½"	3/8"	131310-04	3/8"	3/8"	1/4"

SINGLE CONDENSING UNIT
WITH TWO EQUAL SIZED
FAN COILS

A

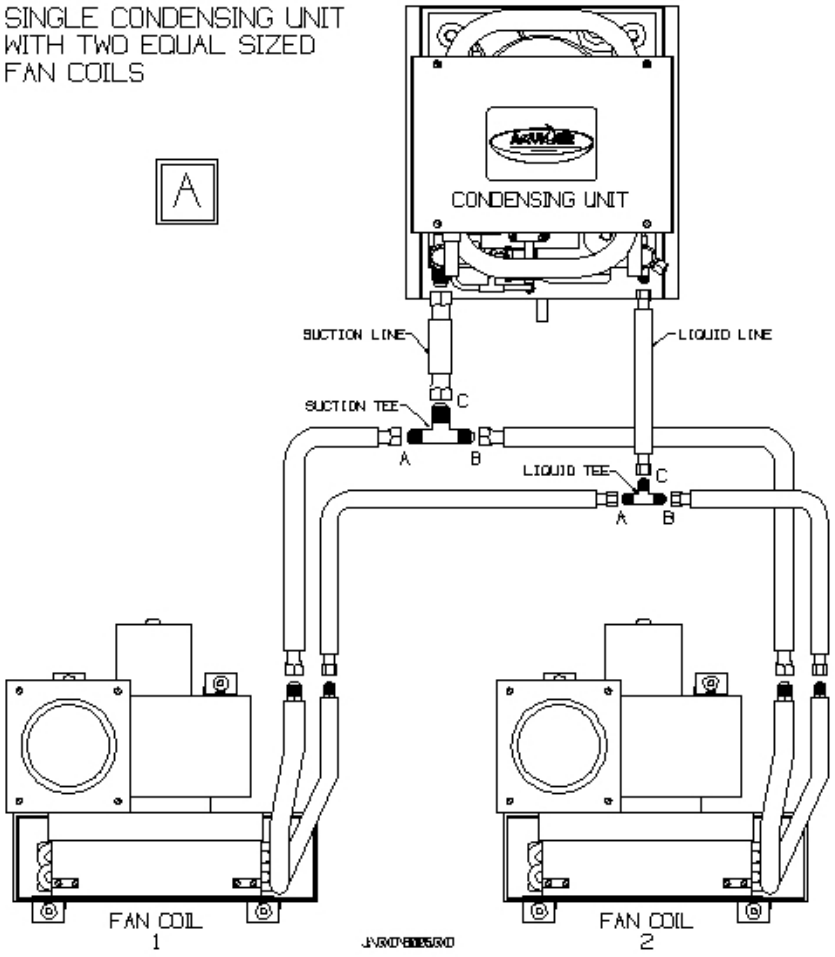

SINGLE CONDENSING UNIT
WITH TWO UNEQUALLY
SIZED FAN COILS

B

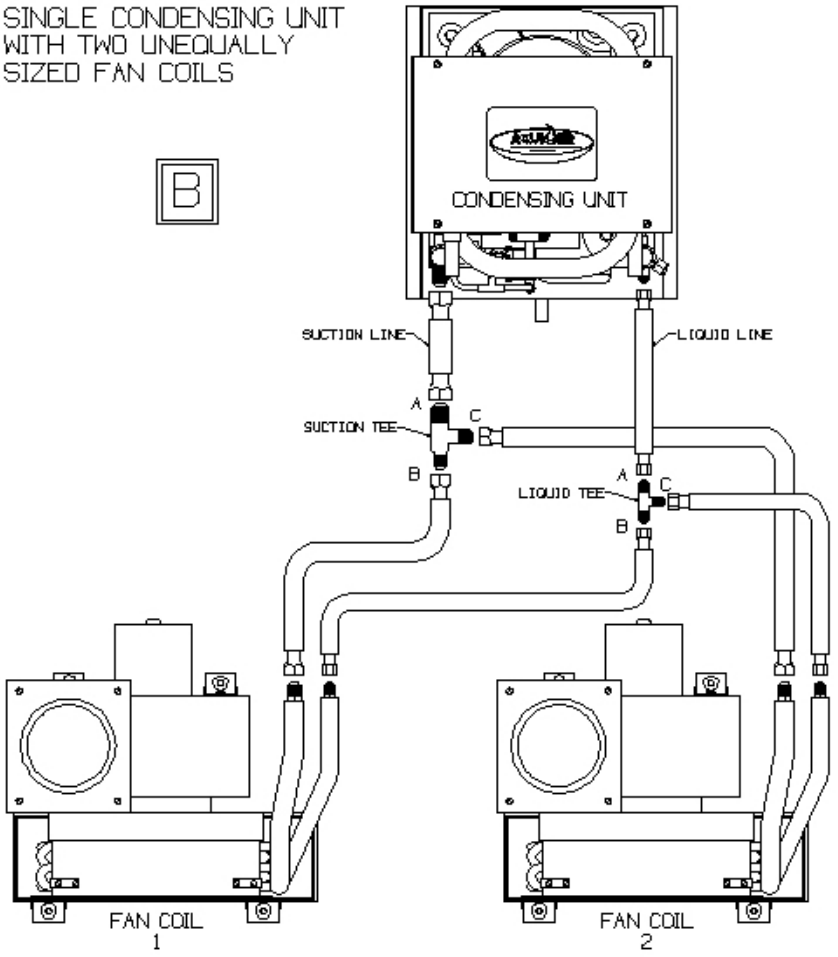

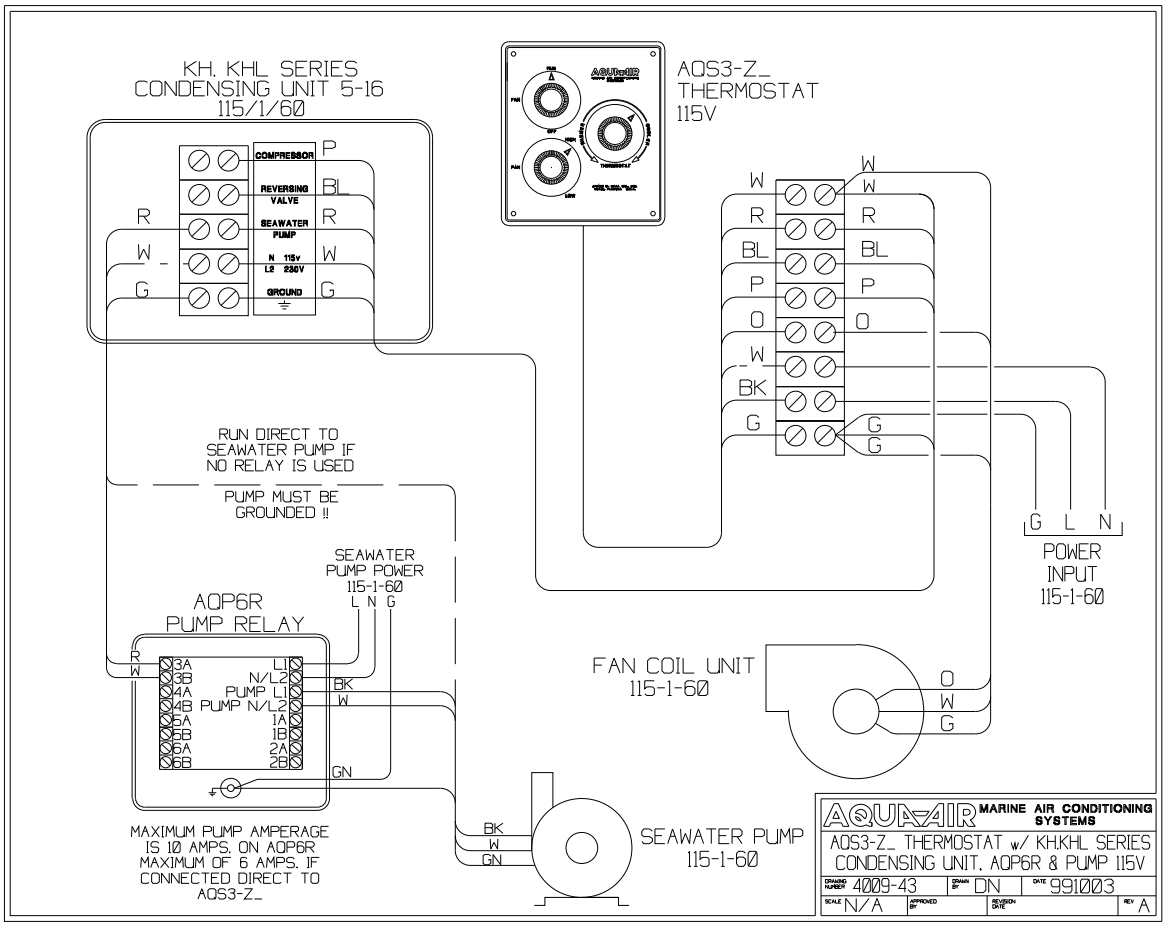
KH, KHL SERIES
CONDENSING UNIT 5-16
115/1/60
COMPRESSOR
REVERSING VALVE
SEAWATER PUMP
N 115v
L2 230V
GROUND
P
BL
R
W
G
AQS3-Z_
THERMOSTAT
115V
W
R
BL
P
O
W
BK
G
G L N
POWER
INPUT
115-1-60
RUN DIRECT TO
SEAWATER PUMP IF
NO RELAY IS USED
PUMP MUST BE
GROUNDED !!
SEAWATER
PUMP POWER
115-1-60
L N G
AQP6R
PUMP RELAY
3A
3B
4A
4B PUMP N/L2
5A
5B
6A
6B
L1
N/L2
PUMP L1
1A
1B
2A
2B
BK
W
GN
MAXIMUM PUMP AMPERAGE
IS 10 AMPS. ON AQP6R
MAXIMUM OF 6 AMPS. IF
CONNECTED DIRECT TO
AQS3-Z_
FAN COIL UNIT
115-1-60
SEAWATER PUMP
115-1-60
AQUA-AIR MARINE AIR CONDITIONING SYSTEMS
AQS3-Z_ THERMOSTAT w/ KH,KHL SERIES
CONDENSING UNIT, AQP6R & PUMP 115V
DRAWING NUMBER 4009-43
DRAWN BY DN
DATE 991003
SCALE N/A
APPROVED BY
REVISION DATE
REV A

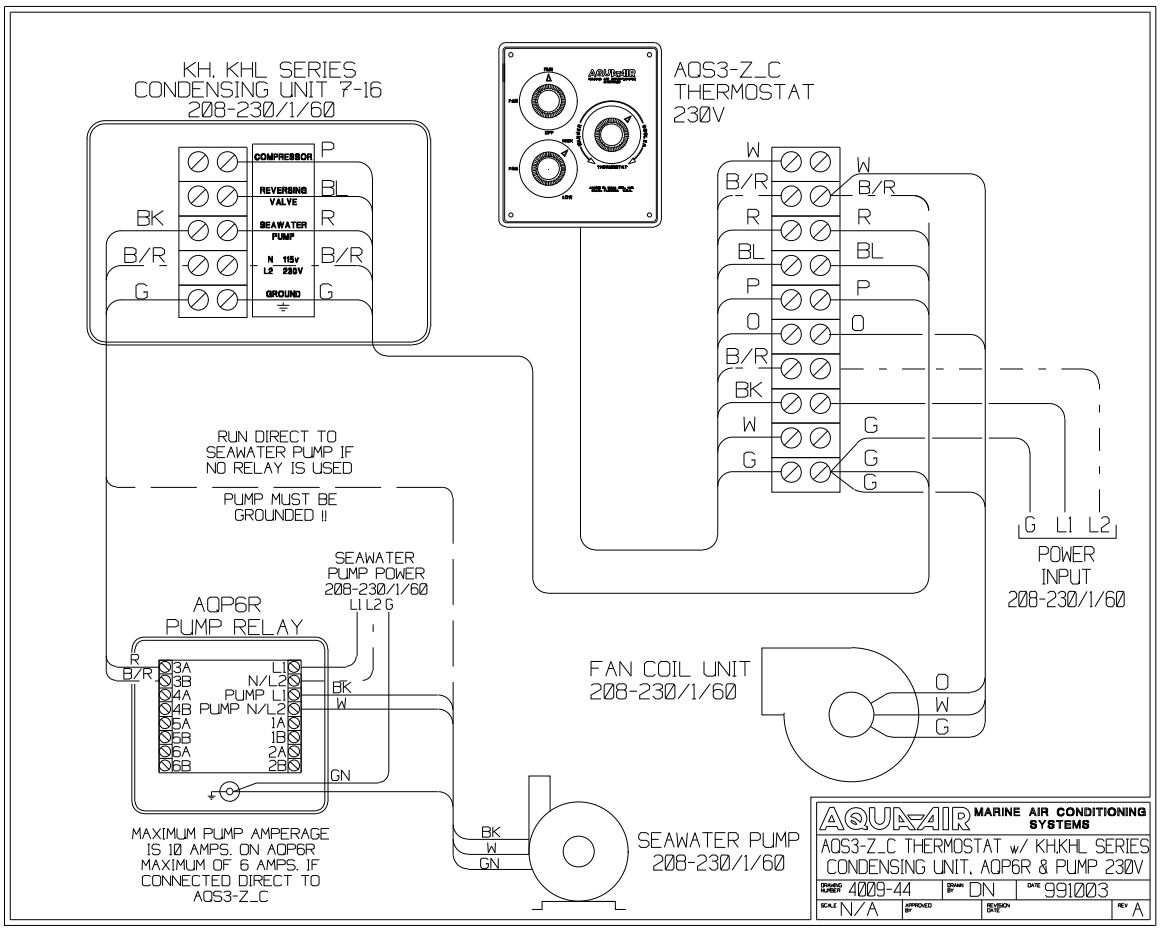
KH, KHL SERIES
CONDENSING UNIT 7-16
208-230/1/60
COMPRESSOR
REVERSING VALVE
SEAWATER PUMP
N 115v
L2 230V
GROUND
P
BL
R
B/R
G
BK
AQS3-Z_C
THERMOSTAT
230V
W
B/R
R
BL
P
O
B/R
BK
W
G
G L1 L2
POWER
INPUT
208-230/1/60
RUN DIRECT TO
SEAWATER PUMP IF
NO RELAY IS USED
PUMP MUST BE
GROUNDED !!
SEAWATER
PUMP POWER
208-230/1/60
L1 L2 G
AQP6R
PUMP RELAY
3A
3B
4A
4B PUMP N/L2
5A
5B
6A
6B
L1
N/L2
PUMP L1
1A
1B
2A
2B
BK
W
GN
MAXIMUM PUMP AMPERAGE
IS 10 AMPS. ON AQP6R
MAXIMUM OF 6 AMPS. IF
CONNECTED DIRECT TO
AQS3-Z_C
FAN COIL UNIT
208-230/1/60
SEAWATER PUMP
208-230/1/60
AQUA-AIR MARINE AIR CONDITIONING SYSTEMS
AQS3-Z_C THERMOSTAT w/ KH,KHL SERIES
CONDENSING UNIT, AQP6R & PUMP 230V
DRAWING NUMBER 4009-44
DRAWN BY DN
DATE 991003
SCALE N/A
APPROVED BY
REVISION DATE
REV A

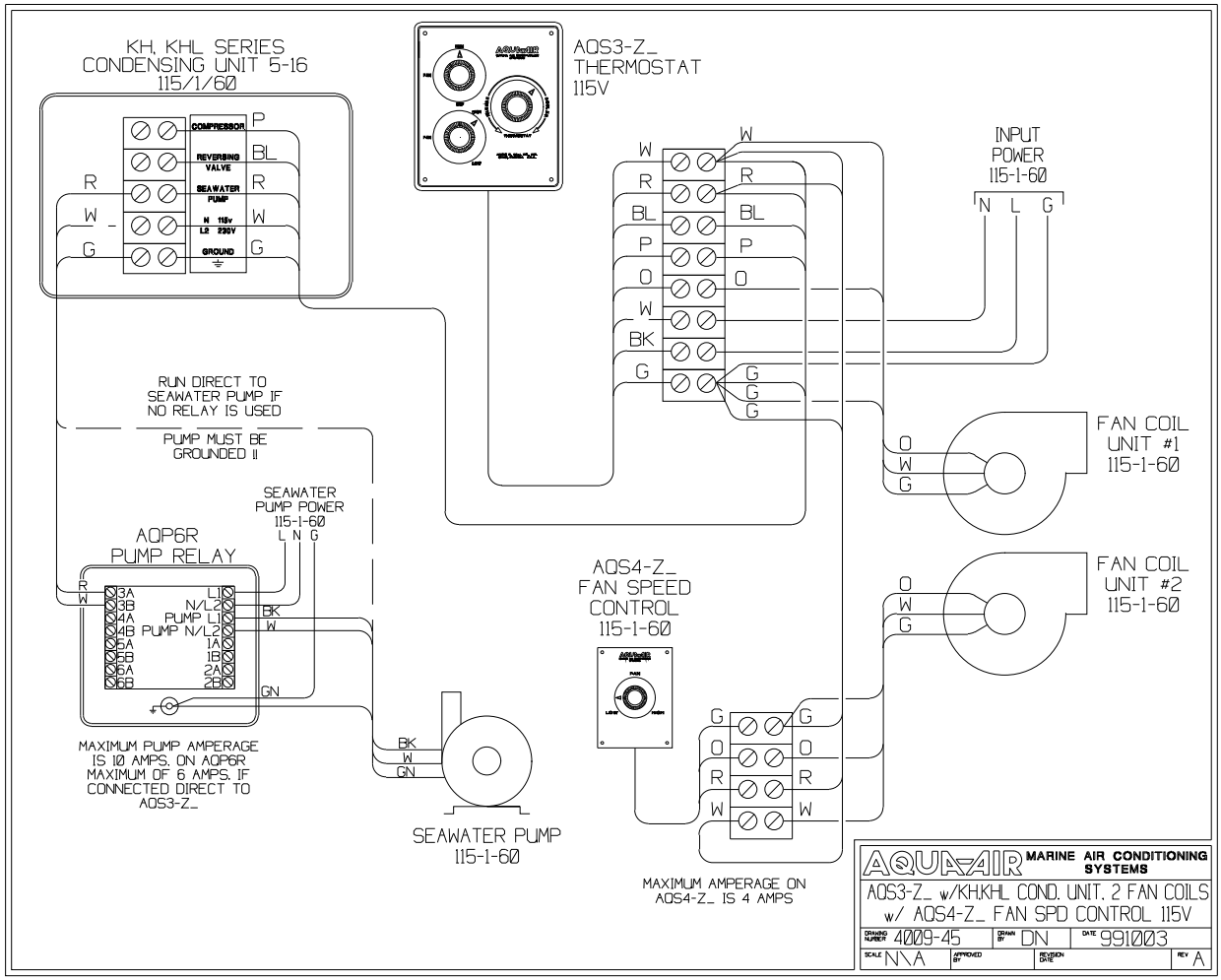
KH, KHL SERIES
CONDENSING UNIT 5-16
115/1/60
COMPRESSOR
REVERSING VALVE
SEAWATER PUMP
N 115v
L2 230V
GROUND
P
BL
R
W
G
AQS3-Z_
THERMOSTAT
115V
INPUT
POWER
115-1-60
N L G
RUN DIRECT TO
SEAWATER PUMP IF
NO RELAY IS USED
PUMP MUST BE
GROUNDED !!
SEAWATER
PUMP POWER
115-1-60
L N G
AQP6R
PUMP RELAY
3A
3B
4A
4B PUMP N/L2
5A
5B
6A
6B
L1
N/L2
PUMP L1
1A
1B
2A
2B
GN
BK
W
MAXIMUM PUMP AMPERAGE
IS 10 AMPS. ON AQP6R
MAXIMUM OF 6 AMPS. IF
CONNECTED DIRECT TO
AQS3-Z_
SEAWATER PUMP
115-1-60
AQS4-Z_
FAN SPEED
CONTROL
115-1-60
MAXIMUM AMPERAGE ON
AQS4-Z_ IS 4 AMPS
FAN COIL
UNIT #1
115-1-60
FAN COIL
UNIT #2
115-1-60
O
AQUA-AIR MARINE AIR CONDITIONING SYSTEMS
AQS3-Z_ w/KH,KHL COND. UNIT, 2 FAN COILS
w/ AQS4-Z_ FAN SPD CONTROL 115V
DRAWING NUMBER 4009-45
DRAWN BY DN
DATE 991003
SCALE N\A
APPROVED BY
REVISION DATE
REV A

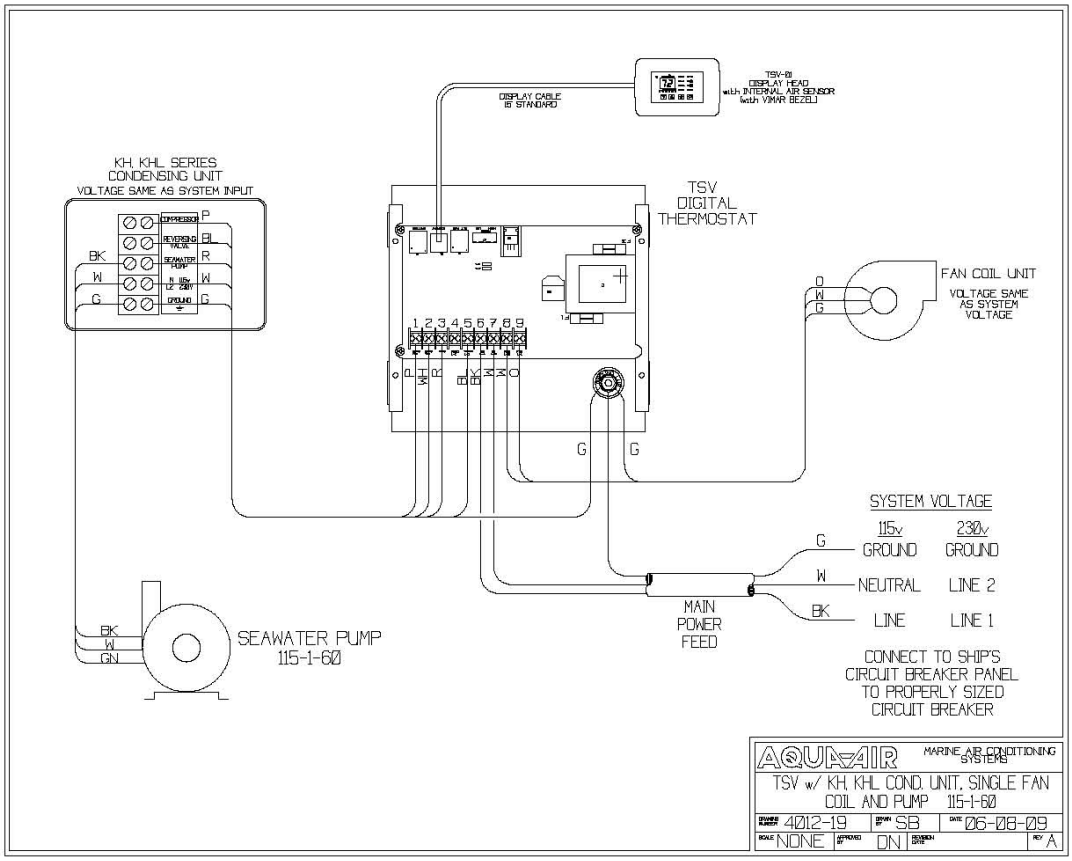
TSV-01
DISPLAY HEAD
with INTERNAL AIR SENSOR
(with VIMAR BEZEL)
DISPLAY CABLE
(6' STANDARD)
KH, KHL SERIES
CONDENSING UNIT
VOLTAGE SAME AS SYSTEM INPUT
TSV
DIGITAL
THERMOSTAT
FAN COIL UNIT
VOLTAGE SAME
AS SYSTEM
VOLTAGE
SYSTEM VOLTAGE
115v
230v
GROUND
GROUND
NEUTRAL
LINE 2
LINE
LINE 1
MAIN
POWER
FEED
SEAWATER PUMP
115-1-60
CONNECT TO SHIP'S
CIRCUIT BREAKER PANEL
TO PROPERLY SIZED
CIRCUIT BREAKER
AQUA-AIR
MARINE AIR CONDITIONING SYSTEMS
TSV w/ KH, KHL COND. UNIT, SINGLE FAN
COIL AND PUMP 115-1-60
4012-19
SB
06-08-09
NONE
DN
A

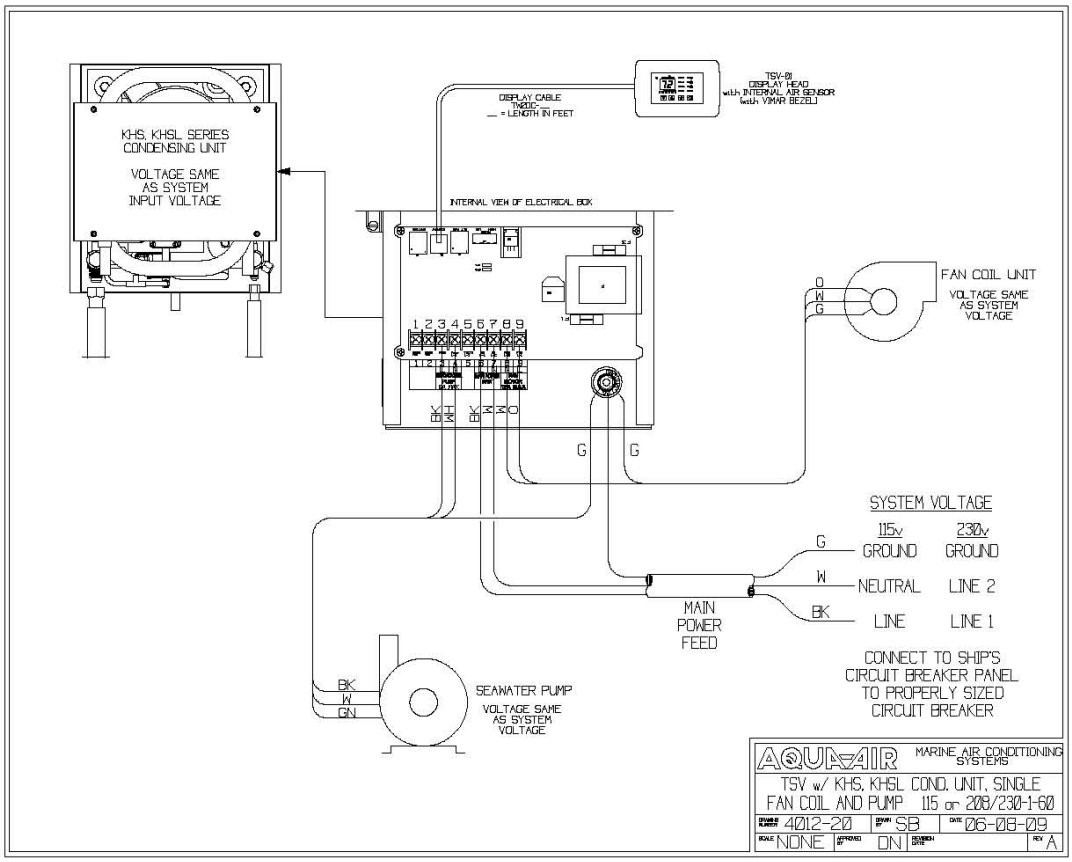
KHS, KHSL SERIES
CONDENSING UNIT
VOLTAGE SAME
AS SYSTEM
INPUT VOLTAGE
TSV-01
DISPLAY HEAD
with INTERNAL AIR SENSOR
(with VIMAR BEZEL)
DISPLAY CABLE
TYP01C-__
__ = LENGTH IN FEET
INTERNAL VIEW OF ELECTRICAL BOX
FAN COIL UNIT
VOLTAGE SAME
AS SYSTEM
VOLTAGE
SYSTEM VOLTAGE
115v
230v
GROUND
GROUND
NEUTRAL
LINE 2
LINE
LINE 1
MAIN
POWER
FEED
SEAWATER PUMP
VOLTAGE SAME
AS SYSTEM
VOLTAGE
CONNECT TO SHIP'S
CIRCUIT BREAKER PANEL
TO PROPERLY SIZED
CIRCUIT BREAKER
AQUA-AIR
MARINE AIR CONDITIONING SYSTEMS
TSV w/ KHS, KHSL COND. UNIT, SINGLE
FAN COIL AND PUMP 115 or 208/230-1-60
4012-20
SB
06-08-09
NONE
DN
A

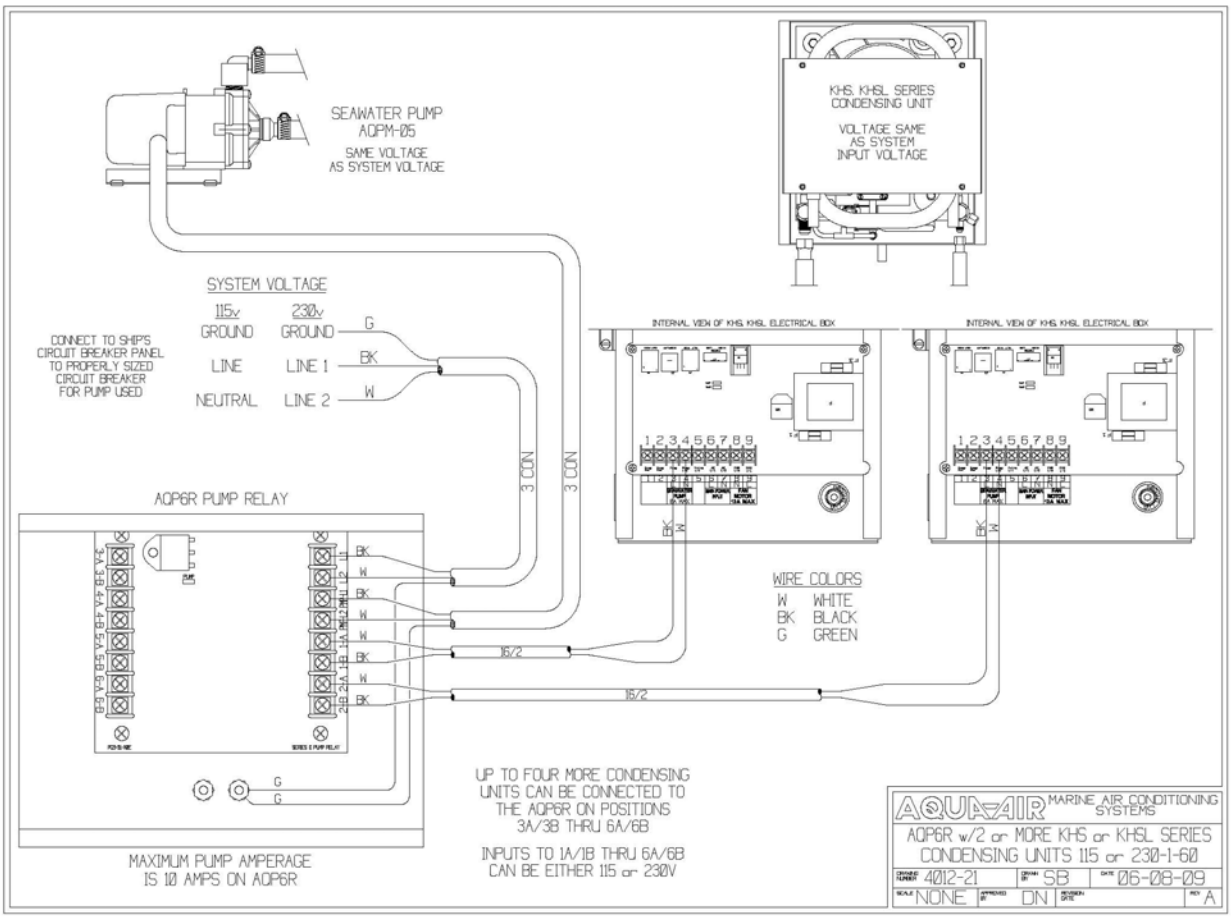
SEAWATER PUMP
AQPM-05
SAME VOLTAGE
AS SYSTEM VOLTAGE
KHS, KHSL SERIES
CONDENSING UNIT
VOLTAGE SAME
AS SYSTEM
INPUT VOLTAGE
SYSTEM VOLTAGE
115v
230v
GROUND
GROUND
G
LINE
LINE 1
BK
NEUTRAL
LINE 2
W
CONNECT TO SHIP'S
CIRCUIT BREAKER PANEL
TO PROPERLY SIZED
CIRCUIT BREAKER
FOR PUMP USED
3 CON
3 CON
INTERNAL VIEW OF KHS, KHSL ELECTRICAL BOX
INTERNAL VIEW OF KHS, KHSL ELECTRICAL BOX
AQP6R PUMP RELAY
WIRE COLORS
W WHITE
BK BLACK
G GREEN
16/2
16/2
UP TO FOUR MORE CONDENSING
UNITS CAN BE CONNECTED TO
THE AQP6R ON POSITIONS
3A/3B THRU 6A/6B
INPUTS TO 1A/1B THRU 6A/6B
CAN BE EITHER 115 or 230V
MAXIMUM PUMP AMPERAGE
IS 10 AMPS ON AQP6R
AQUA-AIR
MARINE AIR CONDITIONING SYSTEMS
AQP6R w/2 or MORE KHS or KHSL SERIES
CONDENSING UNITS 115 or 230-1-60
4012-21
SB
06-08-09
NONE
DN
A

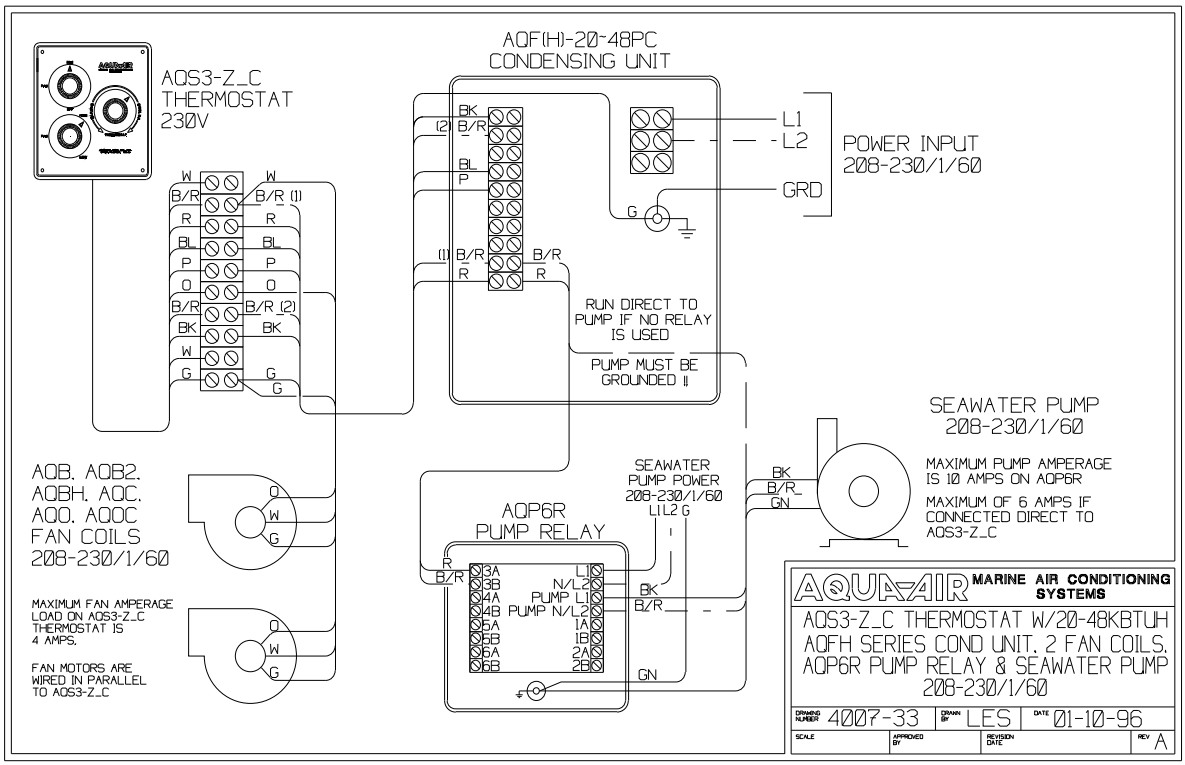
AQF(H)-20-48PC
CONDENSING UNIT
AQS3-Z_C
THERMOSTAT
230V
POWER INPUT
208-230/1/60
L1
L2
GRD
RUN DIRECT TO
PUMP IF NO RELAY
IS USED
PUMP MUST BE
GROUNDED !!
SEAWATER PUMP
208-230/1/60
MAXIMUM PUMP AMPERAGE
IS 10 AMPS ON AQP6R
MAXIMUM OF 6 AMPS IF
CONNECTED DIRECT TO
AQS3-Z_C
SEAWATER
PUMP POWER
208-230/1/60
L1L2 G
AQP6R
PUMP RELAY
AQB. AQB2.
AQBH. AQC.
AQQ. AQQC
FAN COILS
208-230/1/60
MAXIMUM FAN AMPERAGE
LOAD ON AQS3-Z_C
THERMOSTAT IS
4 AMPS.
FAN MOTORS ARE
WIRED IN PARALLEL
TO AQS3-Z_C
AQUA-AIR MARINE AIR CONDITIONING SYSTEMS
AQS3-Z_C THERMOSTAT W/20-48KBTUH
AQFH SERIES COND UNIT, 2 FAN COILS,
AQP6R PUMP RELAY & SEAWATER PUMP
208-230/1/60
DRAWING NUMBER 4007-33
DRAWN BY LES
DATE 01-10-96
SCALE
APPROVED BY
REVISION DATE
REV A

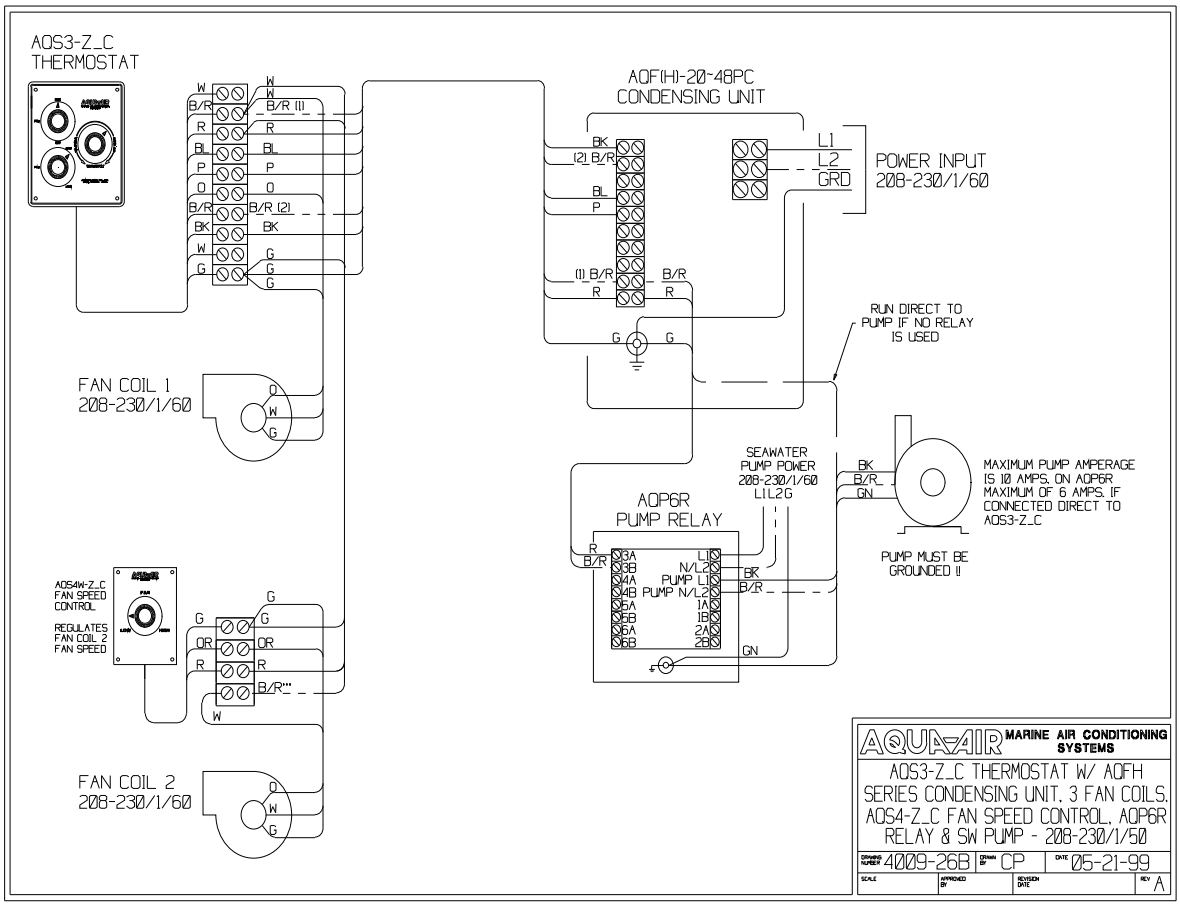
AQS3-Z_C
THERMOSTAT
AQF(H)-20-48PC
CONDENSING UNIT
POWER INPUT
208-230/1/60
L1
L2
GRD
RUN DIRECT TO
PUMP IF NO RELAY
IS USED
FAN COIL 1
208-230/1/60
AQS4W-Z_C
FAN SPEED
CONTROL
REGULATES
FAN COIL 2
FAN SPEED
FAN COIL 2
208-230/1/60
SEAWATER
PUMP POWER
208-230/1/60
L1L2G
AQP6R
PUMP RELAY
MAXIMUM PUMP AMPERAGE
IS 10 AMPS. ON AQP6R
MAXIMUM OF 6 AMPS. IF
CONNECTED DIRECT TO
AQS3-Z_C
PUMP MUST BE
GROUNDED !!
AQUA-AIR MARINE AIR CONDITIONING SYSTEMS
AQS3-Z_C THERMOSTAT W/ AQFH
SERIES CONDENSING UNIT, 3 FAN COILS,
AQS4-Z_C FAN SPEED CONTROL, AQP6R
RELAY & SW PUMP - 208-230/1/50
DRAWING NUMBER 4009-26B
DRAWN BY CP
DATE 05-21-99
SCALE
APPROVED BY
REVISION DATE
REV A

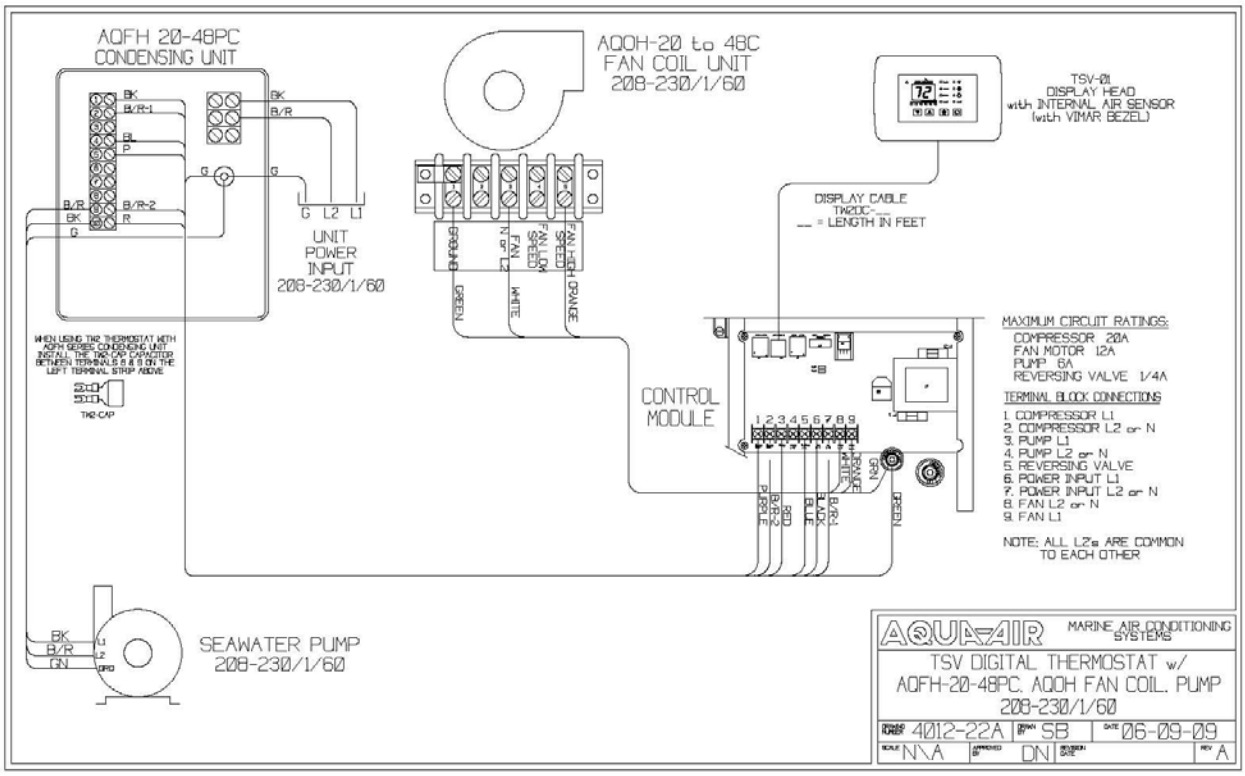
AQFH 20-48PC
CONDENSING UNIT
AQOH-20 to 48C
FAN COIL UNIT
208-230/1/60
TSV-01
DISPLAY HEAD
with INTERNAL AIR SENSOR
(with VIMAR BEZEL)
DISPLAY CABLE
TW20C-__
__ = LENGTH IN FEET
UNIT
POWER
INPUT
208-230/1/60
CONTROL
MODULE
MAXIMUM CIRCUIT RATINGS:
COMPRESSOR 20A
FAN MOTOR 12A
PUMP 6A
REVERSING VALVE 1/4A
TERMINAL BLOCK CONNECTIONS
1. COMPRESSOR L1
2. COMPRESSOR L2 or N
3. PUMP L1
4. PUMP L2 or N
5. REVERSING VALVE
6. POWER INPUT L1
7. POWER INPUT L2 or N
8. FAN L2 or N
9. FAN L1
NOTE: ALL L2's ARE COMMON
TO EACH OTHER
WHEN USING TW2 THERMOSTAT WITH
AQFH SERIES CONDENSING UNIT
INSTALL THE TW2-CAP CAPACITOR
BETWEEN TERMINALS 5 & 8 ON THE
LEFT TERMINAL STRIP ABOVE
TW2-CAP
SEAWATER PUMP
208-230/1/60
AQUA AIR
MARINE AIR CONDITIONING
SYSTEMS
TSV DIGITAL THERMOSTAT w/
AQFH-20-48PC, AQOH FAN COIL, PUMP
208-230/1/60
4012-22A
SB
06-09-09
N\A
DN
A

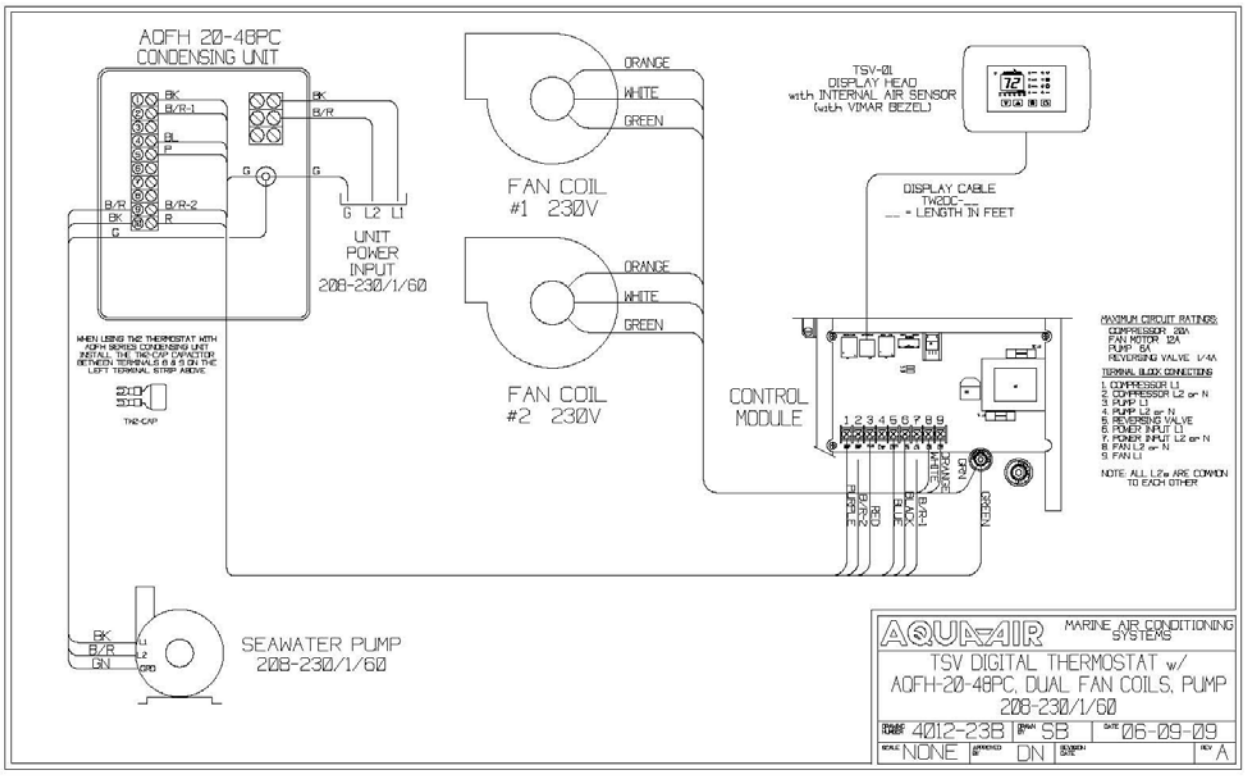
AQFH 20-48PC
CONDENSING UNIT
FAN COIL
#1 230V
FAN COIL
#2 230V
TSV-01
DISPLAY HEAD
with INTERNAL AIR SENSOR
(with VIMAR BEZEL)
DISPLAY CABLE
TW20C-__
__ = LENGTH IN FEET
UNIT
POWER
INPUT
208-230/1/60
CONTROL
MODULE
MAXIMUM CIRCUIT RATINGS:
COMPRESSOR 20A
FAN MOTOR 12A
PUMP 6A
REVERSING VALVE 1/4A
TERMINAL BLOCK CONNECTIONS
1. COMPRESSOR L1
2. COMPRESSOR L2 or N
3. PUMP L1
4. PUMP L2 or N
5. REVERSING VALVE
6. POWER INPUT L1
7. POWER INPUT L2 or N
8. FAN L2 or N
9. FAN L1
NOTE: ALL L2's ARE COMMON
TO EACH OTHER
WHEN USING TW2 THERMOSTAT WITH
AQFH SERIES CONDENSING UNIT
INSTALL THE TW2-CAP CAPACITOR
BETWEEN TERMINALS 5 & 8 ON THE
LEFT TERMINAL STRIP ABOVE
TW2-CAP
SEAWATER PUMP
208-230/1/60
AQUA AIR
MARINE AIR CONDITIONING
SYSTEMS
TSV DIGITAL THERMOSTAT w/
AQFH-20-48PC, DUAL FAN COILS, PUMP
208-230/1/60
4012-23B
SB
06-09-09
NONE
DN
A

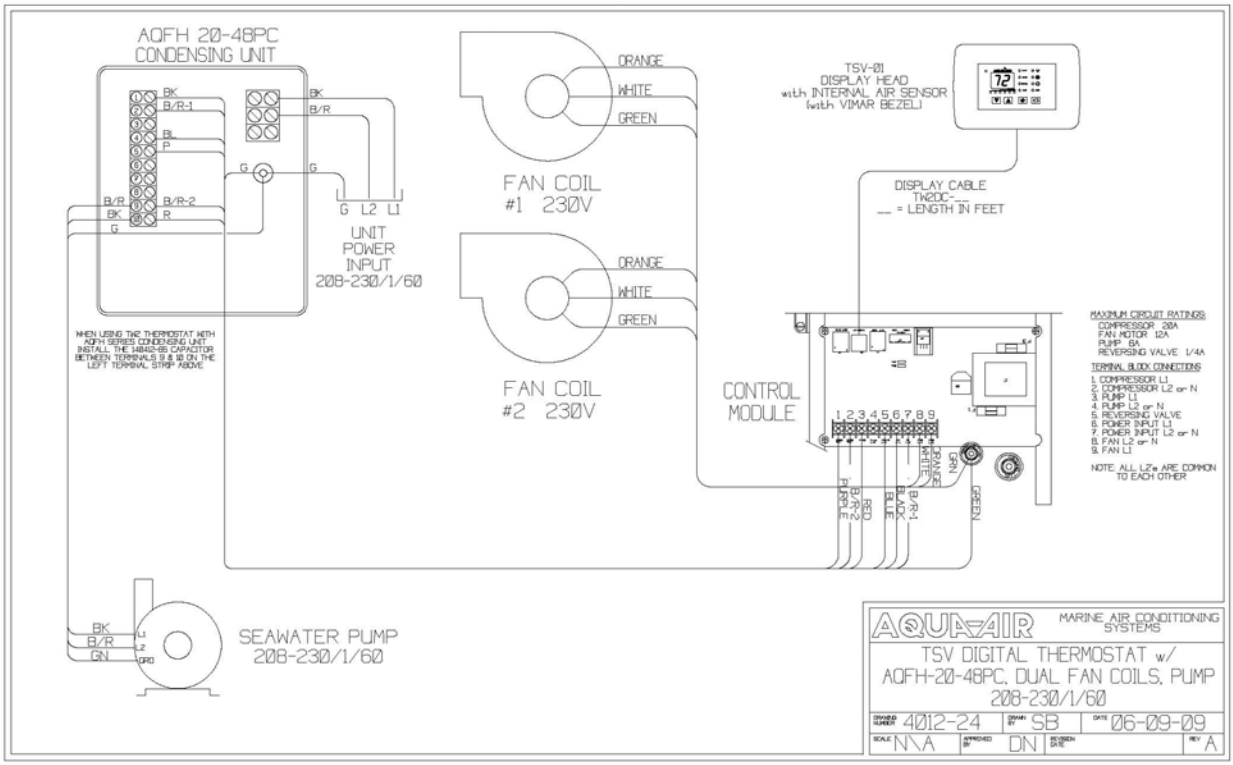
AQFH 20-48PC
CONDENSING UNIT
BK
B/R-1
BL
P
B/R-2
R
G
G L2 L1
UNIT
POWER
INPUT
208-230/1/60
WHEN USING TW2 THERMOSTAT WITH AQFH SERIES CONDENSING UNIT INSTALL THE 14B412-65 CAPACITOR BETWEEN TERMINALS 9 & 10 ON THE LEFT TERMINAL STRIP ABOVE
ORANGE
WHITE
GREEN
FAN COIL
#1 230V
FAN COIL
#2 230V
TSV-01
DISPLAY HEAD
with INTERNAL AIR SENSOR
(with VIMAR BEZEL)
DISPLAY CABLE
TW2DC-__
__ = LENGTH IN FEET
CONTROL
MODULE
1 2 3 4 5 6 7 8 9
PURPLE
B/R-2
RED
BLUE
BLACK
B/R-1
WHITE
ORANGE
GREEN
MAXIMUM CIRCUIT RATINGS:
COMPRESSOR 20A
FAN MOTOR 12A
PUMP 6A
REVERSING VALVE 1/4A
TERMINAL BLOCK CONNECTIONS
1. COMPRESSOR L1
2. COMPRESSOR L2 or N
3. PUMP L1
4. PUMP L2 or N
5. REVERSING VALVE
6. POWER INPUT L1
7. POWER INPUT L2 or N
8. FAN L2 or N
9. FAN L1
NOTE: ALL L2's ARE COMMON TO EACH OTHER
BK
B/R
GN
L1
L2
GRD
SEAWATER PUMP
208-230/1/60
AQUA-AIR
MARINE AIR CONDITIONING SYSTEMS
TSV DIGITAL THERMOSTAT w/
AQFH-20-48PC, DUAL FAN COILS, PUMP
208-230/1/60
DRAWING NUMBER 4012-24
DRAWN BY SB
DATE 06-09-09
SCALE N\A
APPROVED BY DN
REVISION DATE
REV A

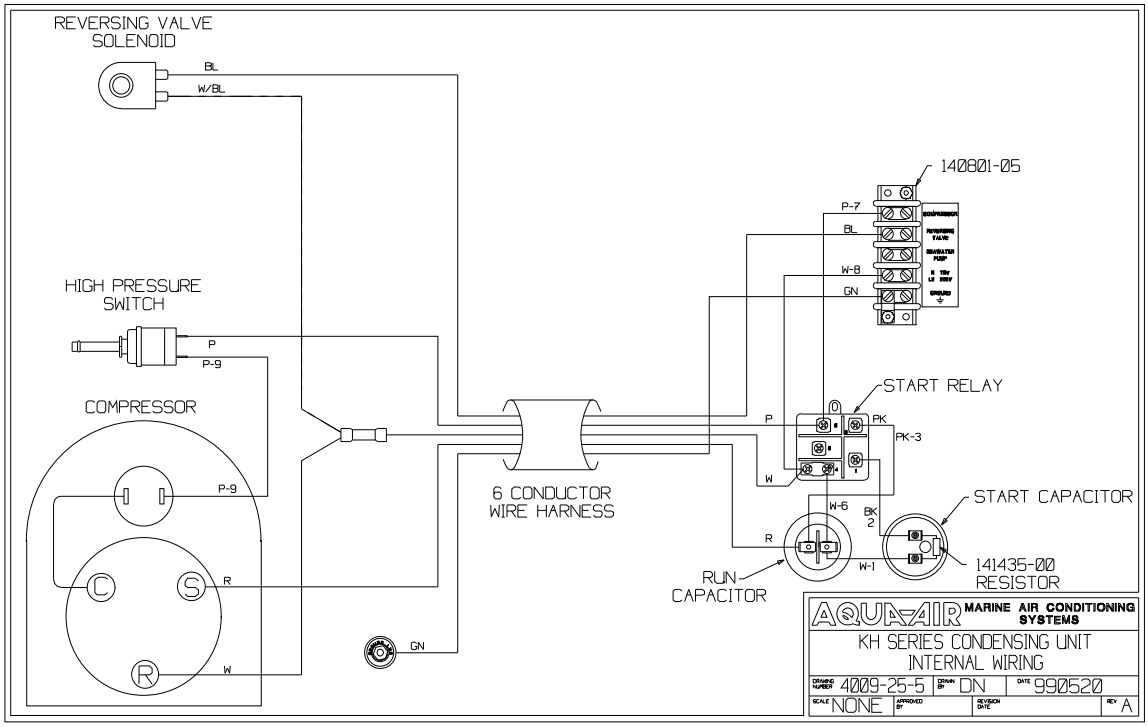
REVERSING VALVE SOLENOID
BL
W/BL
HIGH PRESSURE SWITCH
P
P-9
COMPRESSOR
P-9
C
S
R
R
W
GN
6 CONDUCTOR WIRE HARNESS
140801-05
P-7
BL
W-8
GN
START RELAY
P
PK
PK-3
W
W-6
BK
2
R
W-1
START CAPACITOR
141435-00
RESISTOR
RUN CAPACITOR
AQUA-AIR MARINE AIR CONDITIONING SYSTEMS
KH SERIES CONDENSING UNIT
INTERNAL WIRING
DRAWING NUMBER 4009-25-5
DRAWN BY DN
DATE 990520
SCALE NONE
APPROVED BY
REVISION DATE
REV A

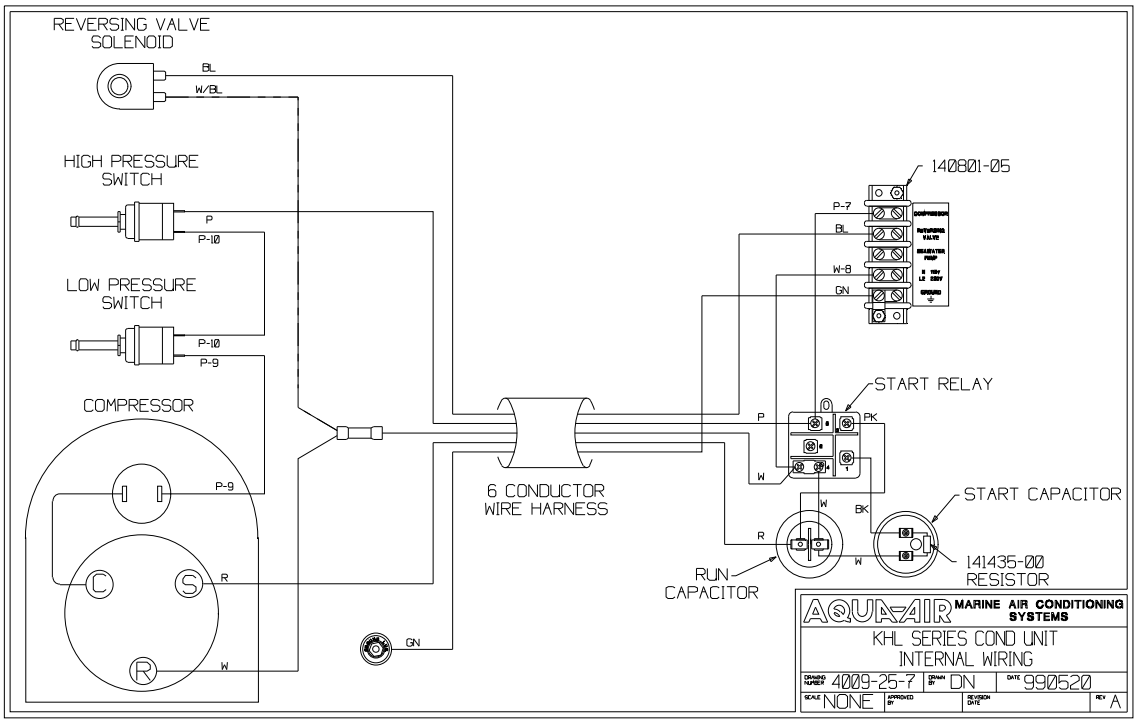
REVERSING VALVE SOLENOID
BL
W/BL
HIGH PRESSURE SWITCH
P
P-10
LOW PRESSURE SWITCH
P-10
P-9
COMPRESSOR
P-9
C
S
R
R
W
GN
6 CONDUCTOR WIRE HARNESS
140801-05
P-7
BL
W-8
GN
START RELAY
P
PK
W
W
BK
R
W
START CAPACITOR
141435-00
RESISTOR
RUN CAPACITOR
AQUA-AIR MARINE AIR CONDITIONING SYSTEMS
KHL SERIES COND UNIT
INTERNAL WIRING
DRAWING NUMBER 4009-25-7
DRAWN BY DN
DATE 990520
SCALE NONE
APPROVED BY
REVISION DATE
REV A

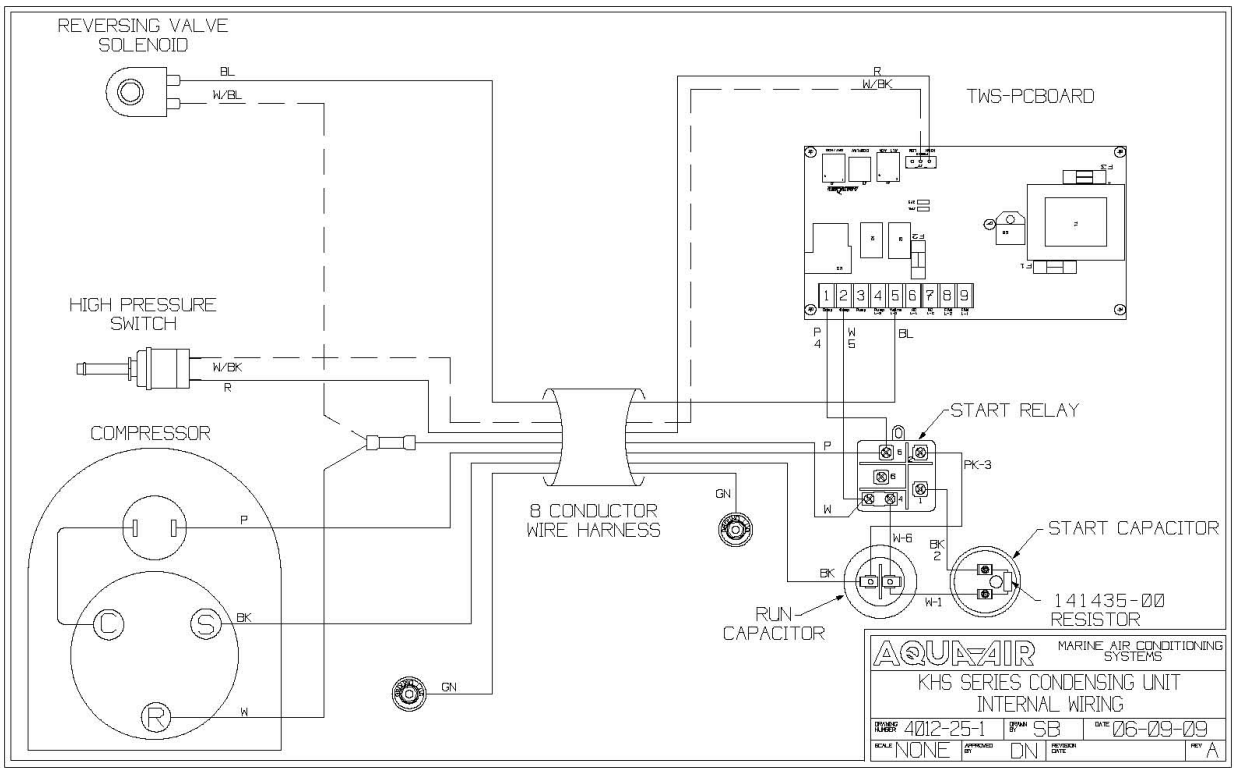
REVERSING VALVE SOLENOID
BL
W/BL
R
W/BK
TWS-PCBOARD
HIGH PRESSURE SWITCH
W/BK
R
COMPRESSOR
P
C
S
BK
R
W
GN
8 CONDUCTOR WIRE HARNESS
P
4
W
5
BL
START RELAY
P
PK-3
W
W-6
BK
2
START CAPACITOR
BK
W-1
141435-00 RESISTOR
RUN CAPACITOR
AQUA-AIR
MARINE AIR CONDITIONING SYSTEMS
KHS SERIES CONDENSING UNIT
INTERNAL WIRING
DRAWING NUMBER 4012-25-1
DRAWN BY SB
DATE 06-09-09
SCALE NONE
APPROVED BY DN
REVISION DATE
REV A

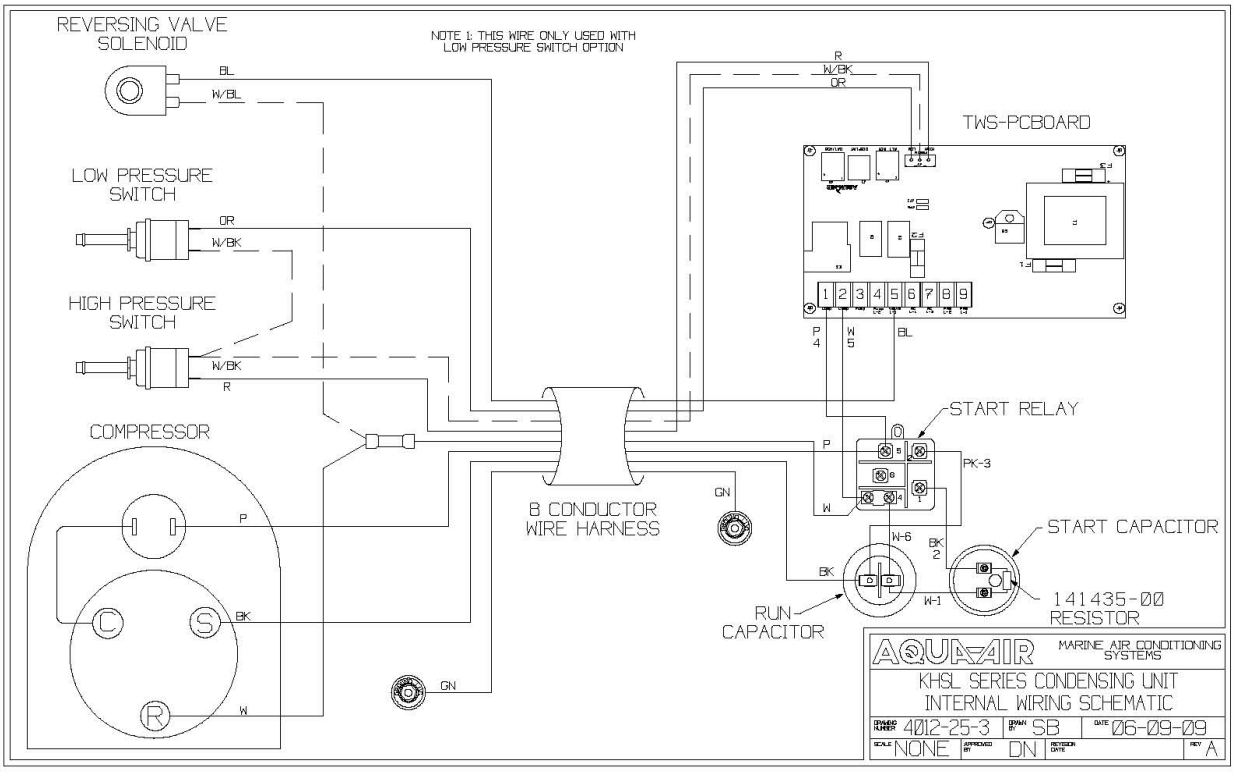
REVERSING VALVE SOLENOID
NOTE 1: THIS WIRE ONLY USED WITH LOW PRESSURE SWITCH OPTION
BL
W/BL
R
W/BK
OR
TWS-PCBOARD
LOW PRESSURE SWITCH
OR
W/BK
HIGH PRESSURE SWITCH
W/BK
R
COMPRESSOR
P
C
S
BK
R
W
GN
8 CONDUCTOR WIRE HARNESS
P
4
W
5
BL
START RELAY
P
PK-3
W
W-6
BK
2
START CAPACITOR
BK
W-1
141435-00 RESISTOR
RUN CAPACITOR
AQUA-AIR
MARINE AIR CONDITIONING SYSTEMS
KHSL SERIES CONDENSING UNIT
INTERNAL WIRING SCHEMATIC
DRAWING NUMBER 4012-25-3
DRAWN BY SB
DATE 06-09-09
SCALE NONE
APPROVED BY DN
REVISION DATE
REV A

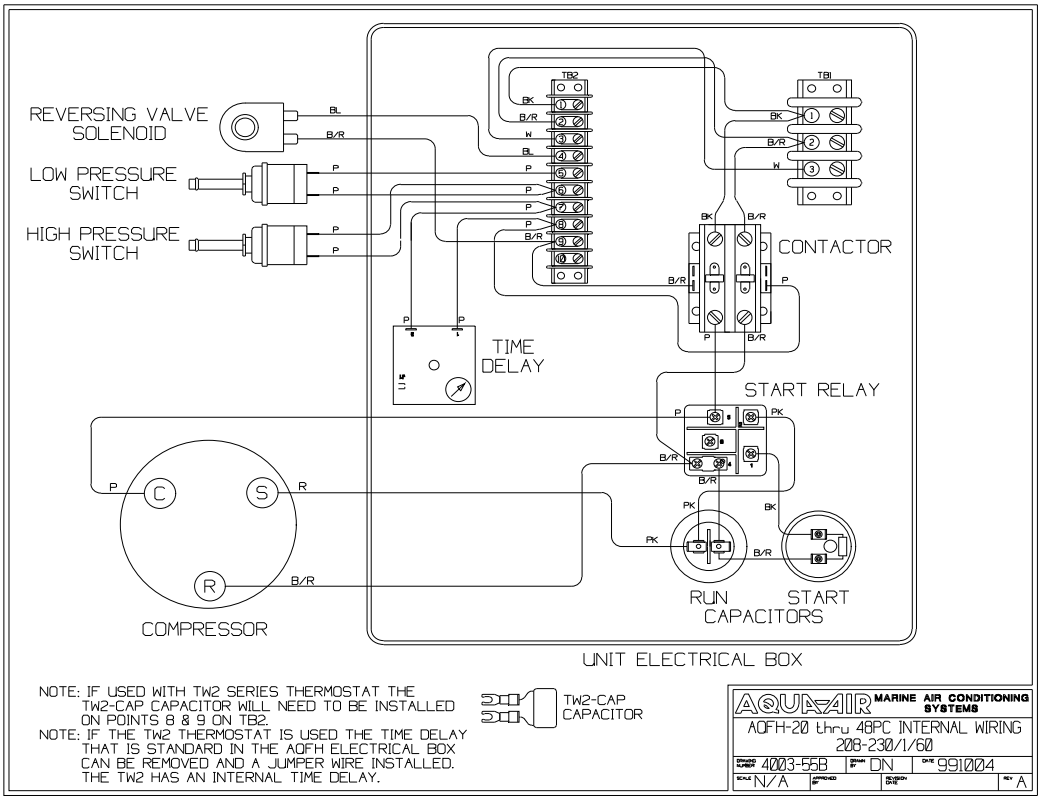
REVERSING VALVE SOLENOID
LOW PRESSURE SWITCH
HIGH PRESSURE SWITCH
TB2
TB1
CONTACTOR
TIME DELAY
START RELAY
COMPRESSOR
RUN CAPACITORS
START
UNIT ELECTRICAL BOX
NOTE: IF USED WITH TW2 SERIES THERMOSTAT THE TW2-CAP CAPACITOR WILL NEED TO BE INSTALLED ON POINTS 8 & 9 ON TB2.
NOTE: IF THE TW2 THERMOSTAT IS USED THE TIME DELAY THAT IS STANDARD IN THE AOFH ELECTRICAL BOX CAN BE REMOVED AND A JUMPER WIRE INSTALLED. THE TW2 HAS AN INTERNAL TIME DELAY.
TW2-CAP CAPACITOR
AQUA-AIR MARINE AIR CONDITIONING SYSTEMS
AOFH-20 thru 48PC INTERNAL WIRING
208-230/1/60
4003-55B
DN
991004
N/A
A

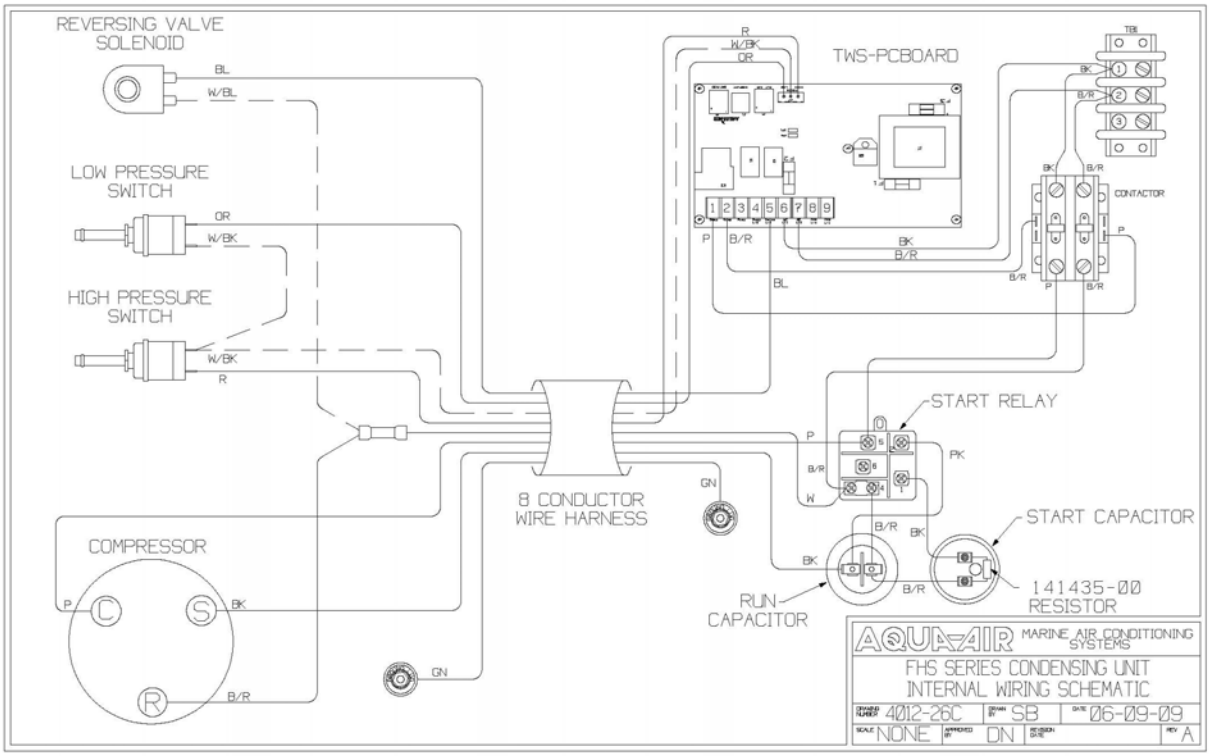
REVERSING VALVE SOLENOID
LOW PRESSURE SWITCH
HIGH PRESSURE SWITCH
TWS-PCBOARD
CONTACTOR
START RELAY
8 CONDUCTOR WIRE HARNESS
START CAPACITOR
141435-00 RESISTOR
RUN CAPACITOR
COMPRESSOR
AQUA-AIR MARINE AIR CONDITIONING SYSTEMS
FHS SERIES CONDENSING UNIT
INTERNAL WIRING SCHEMATIC
4012-26C
SB
06-09-09
NONE
DN
A

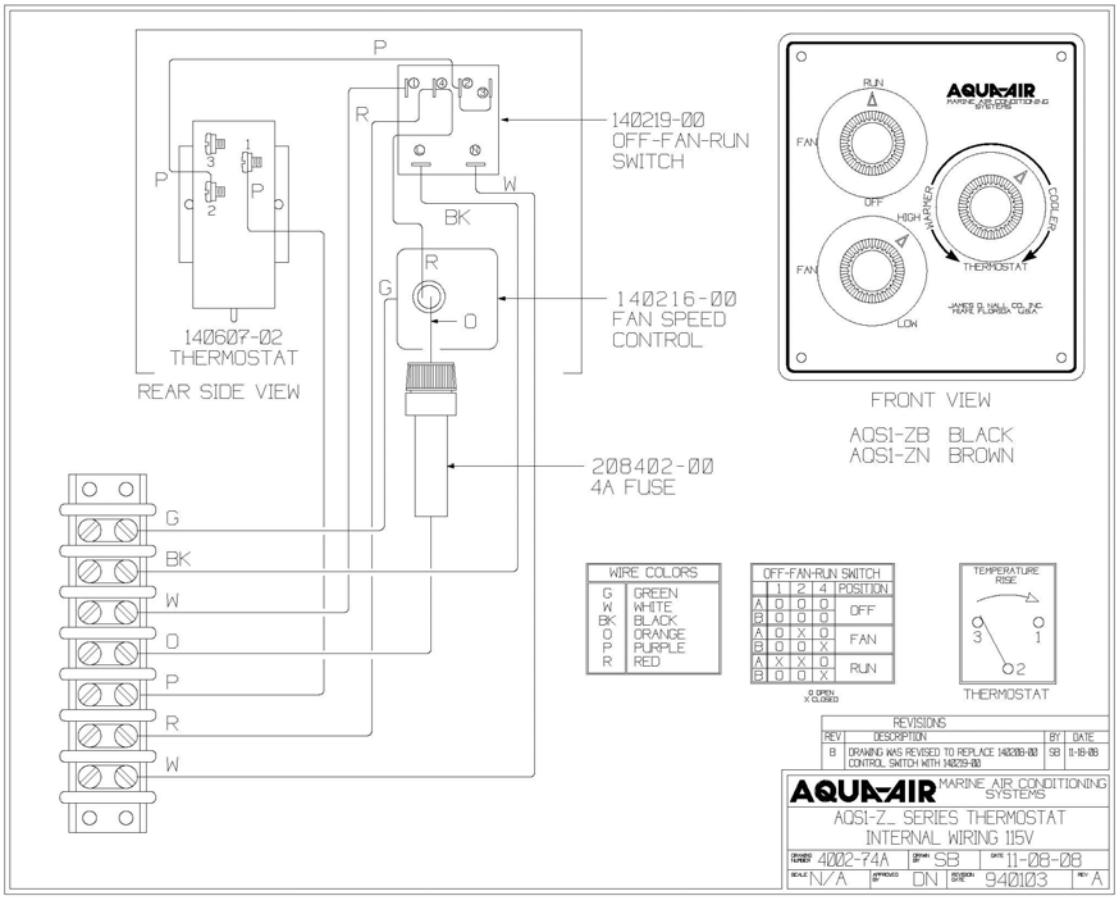
140219-00
OFF-FAN-RUN
SWITCH
140216-00
FAN SPEED
CONTROL
208402-00
4A FUSE
140607-02
THERMOSTAT
REAR SIDE VIEW
FRONT VIEW
AQS1-ZB BLACK
AQS1-ZN BROWN
WIRE COLORS
G GREEN
W WHITE
BK BLACK
O ORANGE
P PURPLE
R RED
OFF-FAN-RUN SWITCH
POSITION
OFF
FAN
RUN
THERMOSTAT
REVISIONS
AQUA-AIR MARINE AIR CONDITIONING SYSTEMS
AQS1-Z_ SERIES THERMOSTAT
INTERNAL WIRING 115V
4002-74A
SB
11-08-08
N/A
DN
940103
A

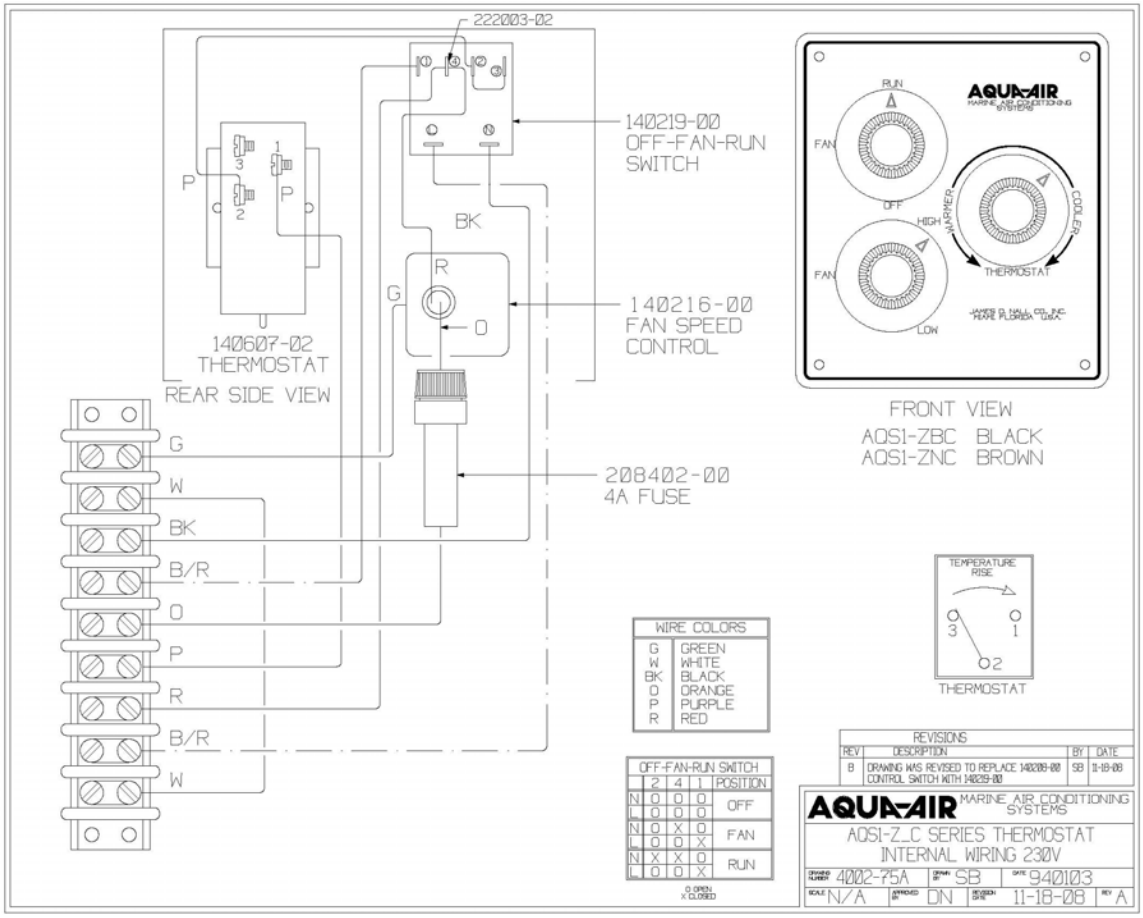
222003-02
140219-00
OFF-FAN-RUN
SWITCH
140216-00
FAN SPEED
CONTROL
208402-00
4A FUSE
140607-02
THERMOSTAT
REAR SIDE VIEW
FRONT VIEW
AQS1-ZBC BLACK
AQS1-ZNC BROWN
WIRE COLORS
G GREEN
W WHITE
BK BLACK
D ORANGE
P PURPLE
R RED
OFF-FAN-RUN SWITCH
POSITION
OFF
FAN
RUN
THERMOSTAT
REVISIONS
AQUA-AIR MARINE AIR CONDITIONING SYSTEMS
AQS1-Z_C SERIES THERMOSTAT
INTERNAL WIRING 230V
4002-75A
SB
940103
N/A
DN
11-18-08
A

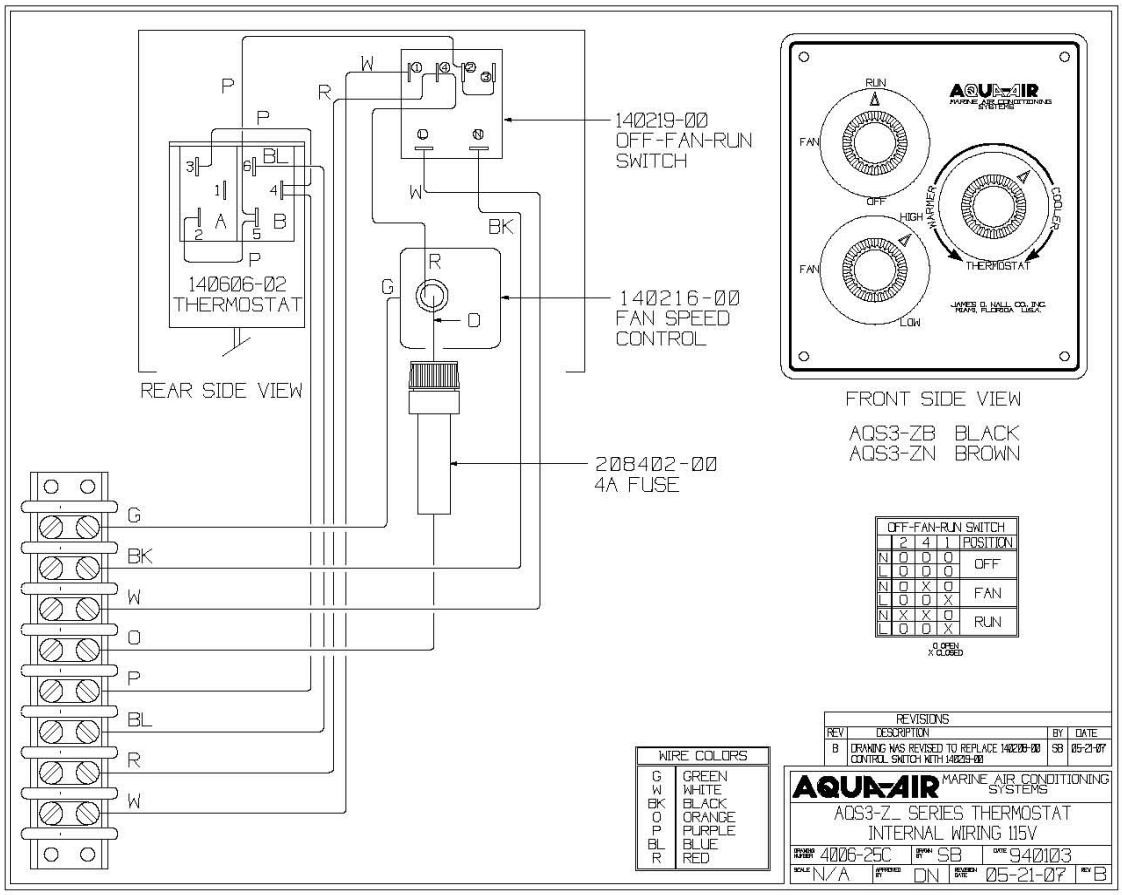
140219-00
OFF-FAN-RUN
SWITCH
140606-02
THERMOSTAT
140216-00
FAN SPEED
CONTROL
208402-00
4A FUSE
REAR SIDE VIEW
FRONT SIDE VIEW
AQS3-ZB BLACK
AQS3-ZN BROWN
G
BK
W
O
P
BL
R
W
OFF-FAN-RUN SWITCH
POSITION
OFF
FAN
RUN
O OPEN
X CLOSED
WIRE COLORS
G GREEN
W WHITE
BK BLACK
O ORANGE
P PURPLE
BL BLUE
R RED
REVISIONS
REV DESCRIPTION BY DATE
B DRAWING WAS REVISED TO REPLACE 140208-00 CONTROL SWITCH WITH 140219-00 SB 05-21-07
AQUA-AIR MARINE AIR CONDITIONING SYSTEMS
AQS3-Z_ SERIES THERMOSTAT
INTERNAL WIRING 115V
DRAWING NUMBER 4006-25C
DRAWN BY SB
DATE 940103
SCALE N/A
APPROVED BY DN
REVISION DATE 05-21-07
REV B

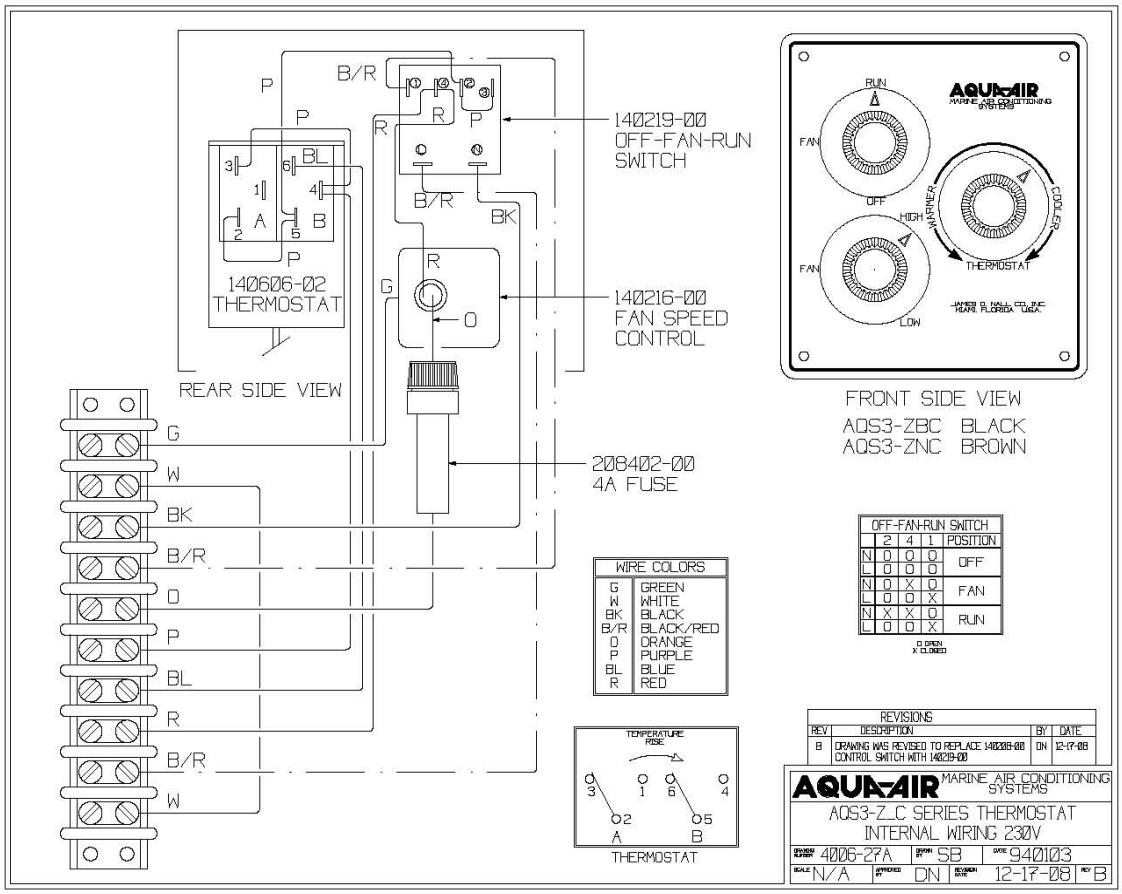
140219-00
OFF-FAN-RUN
SWITCH
140606-02
THERMOSTAT
140216-00
FAN SPEED
CONTROL
208402-00
4A FUSE
REAR SIDE VIEW
FRONT SIDE VIEW
AQS3-ZBC BLACK
AQS3-ZNC BROWN
G
W
BK
B/R
O
P
BL
R
B/R
W
OFF-FAN-RUN SWITCH
POSITION
OFF
FAN
RUN
O OPEN
X CLOSED
WIRE COLORS
G GREEN
W WHITE
BK BLACK
B/R BLACK/RED
O ORANGE
P PURPLE
BL BLUE
R RED
TEMPERATURE PROBE
THERMOSTAT
REVISIONS
REV DESCRIPTION BY DATE
B DRAWING WAS REVISED TO REPLACE 140208-00 CONTROL SWITCH WITH 140219-00 DN 12-17-08
AQUA-AIR MARINE AIR CONDITIONING SYSTEMS
AQS3-Z_C SERIES THERMOSTAT
INTERNAL WIRING 230V
DRAWING NUMBER 4006-27A
DRAWN BY SB
DATE 940103
SCALE N/A
APPROVED BY DN
REVISION DATE 12-17-08
REV B

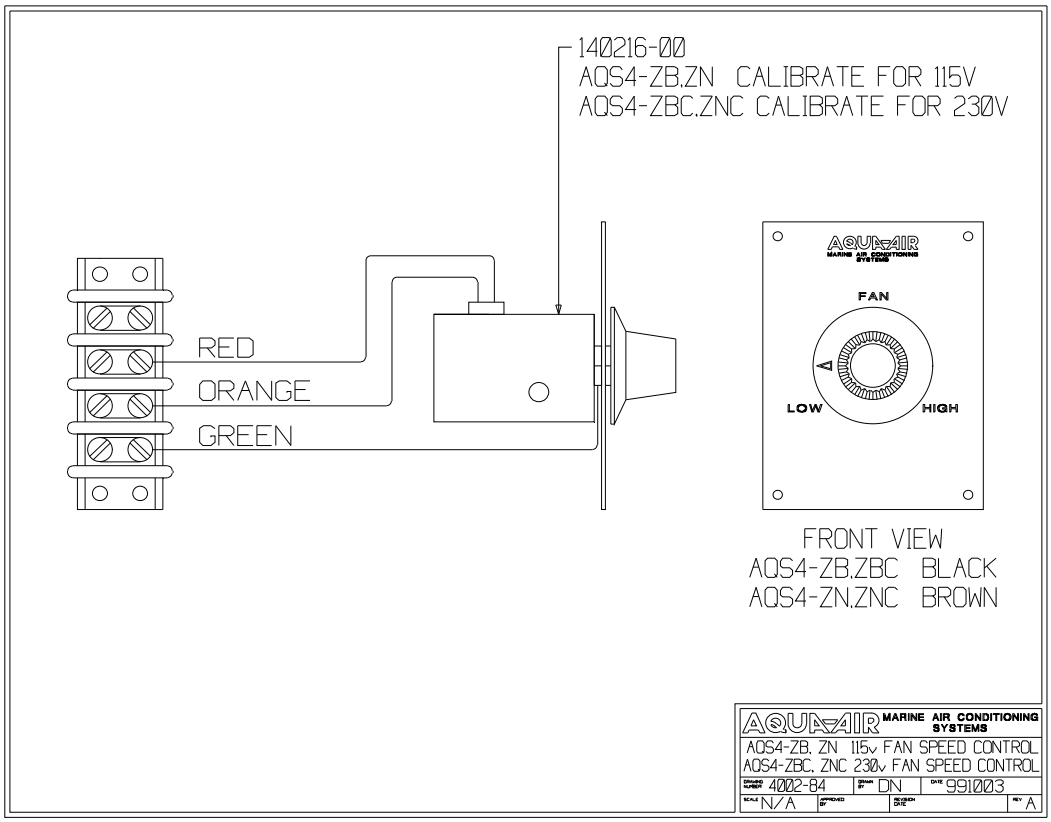
140216-00
AQS4-ZB.ZN CALIBRATE FOR 115V
AQS4-ZBC.ZNC CALIBRATE FOR 230V
RED
ORANGE
GREEN
AQUAIR
MARINE AIR CONDITIONING SYSTEMS
FAN
LOW
HIGH
FRONT VIEW
AQS4-ZB.ZBC BLACK
AQS4-ZN.ZNC BROWN
AQUAIR MARINE AIR CONDITIONING SYSTEMS
AQS4-ZB, ZN 115v FAN SPEED CONTROL
AQS4-ZBC, ZNC 230v FAN SPEED CONTROL
DRAWING NUMBER 4002-84
DRAWN BY DN
DATE 991003
SCALE N/A
APPROVED BY
ISSUED DATE
REV A

AQUA AIR
MARINE AIR CONDITIONING SYSTEMS

DX PRODUCT LIMITED WARRANTY PERIODS

The warranty period on all Aqua-Air DX (Direct Expansion) products is **one year**. Parts and labor are covered per warranty allowance schedules.

The TSV microprocessor controls used in a retrofit on Aqua-Air or any other manufacturer's marine air conditioning equipment will carry a one year warranty. New TSV controls or components of the microprocessor control system purchased to replace out of warranty controls or components will have a one year warranty.

Non-warranty replacement parts and components, other than TSV controls or components, will be warranted for a period of 90 days. This warranty is for parts only, no labor is included. The exception to this category is replacement compressors which carry a one year warranty, including parts and labor from the date they were sold.

Parts and components supplied by Aqua-Air Manufacturing for replacement on any Aqua-Air unit under warranty will be warranted for the remainder of the original warranty period only.

Replacement parts or components used on competitors equipment will have a 90 day warranty. The exception is those parts used in the refrigeration circuit of any competitive brand of air conditioning equipment, which will carry no warranty.

All warranties begin when the customer takes possession of the equipment. The warranty is extended to all owners of the equipment commencing the date the original owner takes possession of it. Verification of original purchase will be required. All warranties are limited to the terms and periods set forth here. Any and all implied warranties are excluded.

Fuses and MOV's are used as safety devices to protect Aqua-Air equipment against over-voltage conditions caused by induced lightning or inductive switching environments. These are not covered under warranty.

Aqua-Air will repair or replace, at its option, components found to be defective due to faulty materials or workmanship, after the component has been examined by Aqua-Air or its authorized servicing dealer. Additionally, Aqua-Air will pay labor costs, as outlined in its Schedule of Limited Allowances, for the removal and replacement of the component. This limited warranty extends to Aqua-Air DX products that have been installed, operated and maintained in accordance with written guidelines available from Aqua-Air.

Aqua-Air reserves the right to change its warranty policies and procedures as well as its warranty allowances without notice.

Aqua-Air equipment is designed and manufactured for long term, trouble free operation when properly operated and maintained. It is strongly recommended that you read your owners manual and fully understand the operations of your Aqua-Air equipment. Any questions you have regarding the operations of your Aqua-Air system or warranty coverage can be directed to your authorized Aqua-Air dealer or to Tech Support at Aqua-Air Manufacturing (800) 457-3928.

AQUA-AIR MANUFACTURING, division of the James D. Nall Co., Inc.
1050 East 9th Street, Hialeah, Florida 33010 U.S.A.
Ph. 305-884-8363 Fax 305-883-8549 E-mail sales@aquaair.com

AQUA AIR
MARINE AIR CONDITIONING SYSTEMS

Aqua-Air Tempwise 2001
Direct Expansion Digital Thermostat

Operating Manual

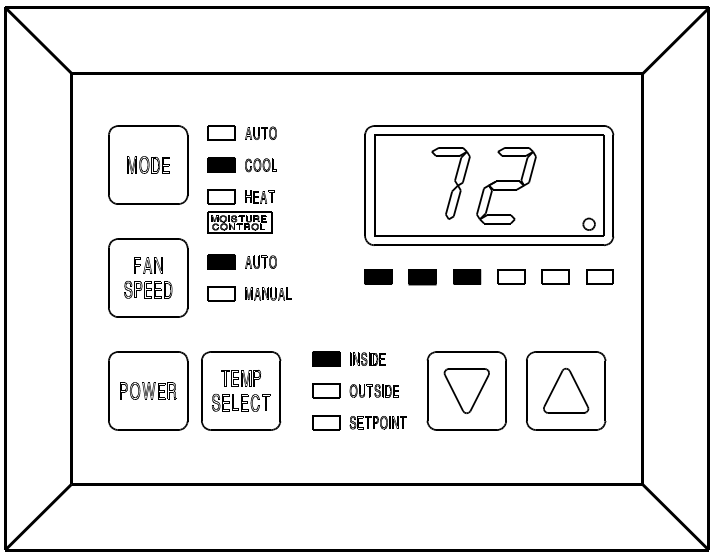

Aqua-Air Manufacturing
division of the James D. Nall Co., Inc.

1050 East 9th Street
Hialeah, FL 33010 U.S.A.
Phone (305) 884-8363 Fax (305) 883-8549
Email: support@aquaair.com

Tempwise 2001 Direct Expansion Digital Thermostat

Aqua-Air Manufacturing
1050 East 9th Street
Hialeah, Florida 33010 U.S.A.

Contents

Introduction 1
Basic Operation 2
Operator Controls and Display Panel 4
Dual Button Functions 7
Special Button Functions 7
Modes of Operation 8
Fan Modes 10
Program Mode 10
Programming 13
Default Settings Table 13
Fail Safe and Fault Handling Codes 18
Factory Self Tests 20
Service Tools 20
Special Hardware Instructions 22
Specifications 24
Trouble Shooting Guide 26

Copyright © 1997 Micro Air Corporation, All Rights Reserved

No part of this publication may be reproduced, translated, stored in a retrieval system, or transmitted on any form or by means electronic, mechanical, photocopying, recording or otherwise without prior written consent by Micro Air Corporation.

Every precaution has been taken in the preparation of this manual to insure its accuracy. However, Micro Air Corporation assumes no responsibility for errors and omissions. Neither is any liability assumed for damages resulting from the use of this product and information contained herein.

INTRODUCTION

The **Tempwise 2001** Control is designed for use with **Aqua-Air** Direct Expansion, reverse cycle Air Conditioning Systems. The **Tempwise 2001** has a universal power supply that operates on 115V or 230V, 50 or 60 Hz AC power. The **Tempwise 2001** includes the following standard and optional features:

Standard Features

User friendly 6 button display panel

Five volt logic and micro controller located in the display

3-digit 7-segment display indicates /F or /C

Paintable Face Plate Cover with recess for matching wall covering insert

Automatic fan speed reduction as set point is approached

Six (6) programmable manual fan speeds

16 programmable parameters for custom installations

AC voltmeter to protect valuable electrical components

High and Low Refrigerant pressure sensor inputs

Moisture Mode for controlling relative humidity

De-Icing cycle to prevent evaporator coil icing

Programmable multiple compressor staging delays

Universal AC power supply

Nonvolatile memory retains settings without batteries

Programmable display brightness control for night use

Optional Features

The following optional items can be added by plugging the device into the appropriate jack and making the necessary programming changes:

Outside Air Temperature Sensor - No programming necessary

Alternate Air Temperature Sensor - No programming necessary

Custom painted display panels

Pump Guard water sensor

This manual is intended to provide information necessary to insure proper installation and operation of the **Tempwise 2001**. Poor installation and/or MISUNDERSTOOD operating parameters will result in unsatisfactory performance and premature failure of the **Tempwise 2001**.

Read This Manual Completely Before Proceeding!

If you require assistance prior to or during the installation of the **Tempwise 2001** call **Aqua-Air** at (305) 884-8363 or Fax your questions to **Aqua-Air** at (305) 883-8549. The **Tempwise 2001** is covered under existing **Aqua-Air Manufacturing** Warranty Policy. Incorrect installation, neglect and system abuse are not covered under **Aqua-Air**'s warranty policy.

> **NOTE**: In order to continually improve the **Tempwise 2001** Control, **Aqua-Air** reserves the right to change this product's basic operation, specifications and design criteria without prior notice.

BASIC OPERATION

The **Tempwise 2001** is a user friendly, easy to operate, programmable temperature control.

- Press the **Power** button once to engage the system. The display indicates room temperature when the system is on and the display is blank when the system is off.
- Press and release the Mode Button until the desired Mode LED is illuminated.
- Set the room temperature by pressing the up or down button. The set point can be viewed by momentarily pressing and releasing the up or down button.

Fan speed operation is automatic. The fan speed decreases as set point temperature is approached. The fan will operate at low speed when set point is satisfied. Manual fan speeds can be selected by pressing the Fan Speed Button and selecting the desired

fan speed. The fan will operate at the speed selected and will not change speeds with room temperature.

The fan can be programmed to cycle on and off with the Heating and Cooling demand. Normally the automatic fan speed operation is reversed in the heating mode, however, the fan speeds can be programmed to operate the same as in the cooling mode.

NORMAL HEATING OR COOLING CYCLE

Select Cool only and cooling only will be supplied. The cabin temperature will be maintained within 2/ F of the set point. Select Heat only and only heating will be supplied. The cabin temperature will be maintained within 2/ F of the set point.

Select Automatic and both heating and cooling will be supplied as required. While in the automatic Mode Tempwise 2001 will maintain a two degrees Fahrenheit (2 /F) temperature variation. A four degree swing is required to cause the unit to shift to the opposite mode. Once in a given mode, heating or cooling, Tempwise 2001 will maintain a two degree differential.

When the Heating or Cooling demand is satisfied, the compressor cycles off and the Automatic Fan returns to low speed. The fan speed will remain constant if Manual Fan Speed has been programmed.

REVERSING VALVE OPERATION

The reversing valve is toggled to the opposite mode when heating or cooling is required to reduce the compressor starting surge. The valve will only toggle to the opposite mode when a cooling or heating cycle is called for and if the system has been off for less than seventy-five (75) seconds. The valve will also toggle if a cycle is interrupted from the display panel by pressing the power button ON/OFF, or changing the set point. Unnecessary valve toggling has been limited to reduce reversing valve noise. Valve toggling can be totally eliminated by programming the minimum compressor staging delay at seventy-five seconds (75) or greater.

Power on reset, which occurs when the system is powered up, will always initiate a valve toggle.

MOISTURE MODE

While in the **On** mode, press the Mode Button until the Moisture Control LED is lit. Every four (4) hours, the fan is started and air circulated for thirty (30) minutes. During this time the air temperature is sampled and entered into memory. The cooling cycle is started and continues until the temperature is lowered 2/ F. The system is allowed a maximum of one hour running time to reach the desired temperature. Four (4) hours after the temperature is satisfied or the Cooling Mode times out, the cycle is repeated. During the humidity cycle the water valve LED is lit while the system is cooling.

MEMORY

The **Tempwise 2001** has nonvolatile memory which requires no batteries or any form of backup power. When power is lost the operating parameters are retained indefinitely. When power is restored, the control resumes operating as last programmed. All operating and programming parameters are entered into nonvolatile memory instantly and are retained indefinitely.

OPERATOR CONTROLS AND DISPLAY PANEL

Refer to **Figure 1** for the buttons locations and display functions listed on the following pages.

1. **POWER BUTTON** - The power button is used to toggle between the **On** and **Off** modes. Press the power button once to toggle the unit to the **On** mode. Press the power button again to toggle to the **Off** mode.

2. **FAN SPEED BUTTON** - Press and release the **Fan Button** to advance from auto fan to manual fan. Press and release the fan speed button to advance the manual fan speeds, 1 through 6. Press and release again to return to the automatic fan mode. The selected fan mode is indicated by the auto and manual fan LED's.

3. **UP BUTTON** - Momentarily press the **up button** and the set point will appear in the temperature display. Press and release the up button to increase the set point one degree. The set point Is increased by one degree each time the up button is pressed and released. The highest set point allowed is 85/ F. The up button is used with the down button to display the Water In temperature when the control is on. The up button is also used to increase program values in the program mode.

4. **DOWN BUTTON** - Momentarily press and release the **down button** to display the set point. Press and release the down button to decrease the set point. The set point is decreased one degree each time the down button is pressed and released. The lowest set point allowed is 55/ F. The down button is used in conjunction with the up button to display Water In temperature when the control is on. The down button is also used to reduce program values in the program mode.

Tempwise 2001 Display Panel

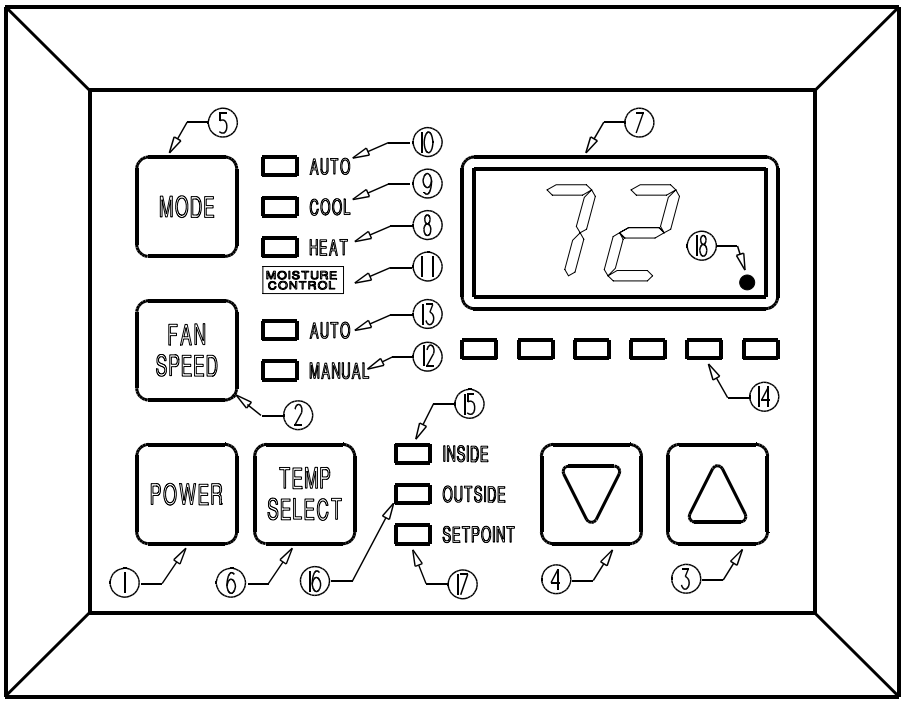

Figure 1: Tempwise 2001 Control Buttons and Indicator Displays

5. **MODE BUTTON** - The mode button is used to select one of the four operating modes. Press and release the mode button and the **Tempwise 2001** will advance to the next mode. Continue to press and release the Mode button until the desired operating mode is reached. The mode selected is indicated by the Mode LED, i.e., Cool, Heat, Automatic or Moisture Mode.

6. **TEMP SELECT BUTTON** - Press and release the Temp Mode Button to view inside air temperature, outside air temperature (optional) or the set point. The appropriate LED, Inside, Outside or Set Point will be lit indicating which temperature is being displayed. If no outside air sensor is installed three (3) dashes will appear in the Three Digit Display.

7. **THREE DIGIT SEVEN SEGMENT DISPLAY** - The inside air temperature is displayed in the window whenever the control is turned on. The three digit 7 segment display provides a readout of the return air temperature. The display also indicates program information, fault codes and outside air temperature when the optional outside air sensor is installed. The display momentarily indicates the set point when the up or down button is pressed. When the control resumes operation after a power interruption all the display LEDs will turn on for one second. This is a normal operating condition and is referred to as "Power On Reset".

8. **HEAT MODE LED** - The heat mode LED will be lit when the Heat Mode has been selected. The heat mode LED is also lit when the optional electric heat is installed and the beat mode is selected. Electric heater status, on or off, is indicated by the right side decimal point (18).

9. **COOL MODE LED** - The cool mode LED will be lit when the Cooling Mode has been selected.

10. **AUTO LED** - The auto LED is lit when the automatic heating or cooling mode has been selected. The control will automatically switch to heating or cooling when this mode is selected.

11. **MOISTURE CONTROL LED** - The moisture mode LED is lit when the Moisture Control has been selected. This mode is used to control humidity during periods when the vessel is unoccupied.

12. **MANUAL FAN LED** - The manual fan LED will be lit when one of six manual fan speeds has been selected.

13. **AUTO FAN LED** - The auto fan LED is illuminated when automatic fan speed operation has been selected.

14. **FAN SPEED BAR GRAPH** - There are six (6) individual fan speed LED's in the Fan Speed Bar Graph. Each LED represents one (1) fan speed. Low fan speed (1) is indicated by illuminating the first LED. High fan speed is indicated by illuminating all six (6) LED's. Any of the six (6) fan speeds available are displayed by illuminating the appropriate LED's.

15. **INSIDE LED** - The inside LED is lit when the inside air temperature is being displayed.

16. **OUTSIDE LED** - The outside LED is turned on when the outside temperature is displayed (optional).

17. **SET POINT LED** - The set point LED is turned on when the set point is displayed.

18. **VALVE LED** - The water valve operating status (Open or Closed) is indicated by turning on the right most decimal point in the 3 Digit Display.

DUAL BUTTON FUNCTIONS

Up & Down Buttons....Press the Up and Down buttons together and the outside air temperature will be displayed, provided the OPTIONAL OUTSIDE AIR TEMPERATURE SENSOR has been installed. No programming is required.

Press the UP & Down Buttons simultaneously, while in the program mode, to set new custom programming defaults.

Power and Down buttons.... Simultaneously press the power and down buttons while viewing the Service Fault History Log clears the Fault History Log.

SPECIAL BUTTON FUNCTIONS

Special button functions are implemented by pressing and holding a particular button while the controls' AC power is turned on.

1. **Service History Log**... View the service history log by pressing and holding the Mode Button while turning on the AC power. Exit the service history log by pressing the power button once. Clear the service history log by simultaneously pressing the power

and down buttons.

2. **Self Test Mode**... Press and hold the power button while AC power is applied to enter the self test mode, The self test is used to diagnose problems and test the air conditioning system. For complete details see page 14 of this manual.

3. **View Hour Meter**... To view the compressor hour meter, press and hold the down button while applying AC power. Maximum recorded time is 10,000 hours. The hour meter stops at maximum (10,000 hrs) and can only be reset by Aqua-Air Manufacturing. The hour meter functions are described fully on page 16 of this manual.

MODES OF OPERATION

Off Mode

When the **Tempwise 2001** is in the **Off** mode, all control outputs are turned off. Program parameters and user settings are saved in nonvolatile memory. The program mode can only be accessed from the **Off** mode.

On Mode

When the control is in the **On** mode, power will be supplied to the appropriate control outputs and the display will indicate the current state of operation. The operating and program parameters resume based on those stored the last time the unit was operating.

Cool Only Mode

When "**Cool**" LED is on, only the cooling systems are selected and operated as required. When the temperature drops below the set point, the system will not automatically switch to the heating mode. Cooling only is available for customers that do not want automatic cooling and heating operation. Systems without reverse cycle heating can have an optional electric heater installed should heating be required.

Heating Only Mode

When the "**Heat**" LED is on, only the heating systems are selected and operated as required. Should the temperature rise above the set point, the system will not automatically switch to the cooling mode. Heating only is supplied for customers that require the system to not automatically switch from the heating to the cooling mode.

Automatic Mode

When the "**Automatic**" LED is on, both heating and cooling are supplied as required. The **heat** and **cool LED's** will be lit according to the mode required. When the system requires compressor operation for heating or cooling, theright most decimal point (18) will turn on when the compressor is On.

Temperature in a given mode will be maintained within two degrees Fahrenheit (2/F) of the set point temperature, however, a four degree difference is required to allow the control to change modes. Once in a new mode, the temperature will remain within two degrees Fahrenheit (2/F) of the set point.

Moisture Mode

While in the "**On**" mode, press the **Mode** Button until the Moisture Mode LED is illuminated. Every four (4) hours, the fan is started and air circulated for thirty (30) minutes. During this time the air temperature is sampled and entered into memory. The cooling cycle is started and continues until the temperature is lowered 2/F. The system is allowed maximum of one hour running time to reach the desired temperature. Four (4) hours after the temperature is satisfied or the one hour timer runs out the cycle is repeated. During the humidity cycle the water valve LED is lit while the water valve is turned on and the system is cooling.

FAN MODES

Automatic Fan Speeds

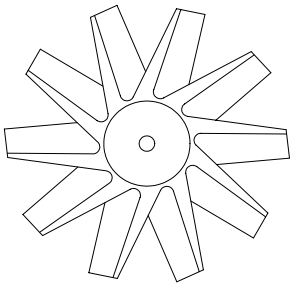

Tempwise 2001 has six automatic fan speeds available. Speed six is high, three is medium and one is low or the slowest speed. Automatic fan mode allows the **Tempwise 2001** to determine the required fan speed based on room temperature. The closer the room temperature is to the set point, the slower the fan will run. This permits a balance between the most efficient temperature control and slower, quieter fan speeds. Automatic fan operation is the **factory default**, however, manual fan speed control is available.

Manual Fan Speeds

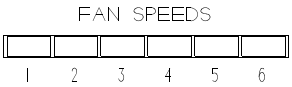

Six (6) is the fastest and one (1) represents the slowest fan speed. Manual fan mode allows the user to select and maintain the desired fan speed manually. When a manual fan speed has been selected, the fan speed bar graph will indicate the speed selected by the number of LED's lit. Select speed 3, for Fan Speeds example, and the first 3 LEDs in the fan bar graph will turn on. Manual Fan Mode is sometimes preferred when room temperature is constantly changing due to varying heat loads.

PROGRAM MODE

Program Mode Overview

The program mode is used to adjust the systems operating parameters to suit the particular needs of individual users. The program mode is also used to tailor the air-conditioning system for the most efficient operation within an installation. Installation variables such as, ducting, sensor location and system layout affect the perceived operation of the overall system. The program mode allows the system to operate as efficiently as possible under all conditions. The **Tempwise 2001** is shipped with factory programmable default settings which are stored in permanent memory and can be recalled at any time.

Warning

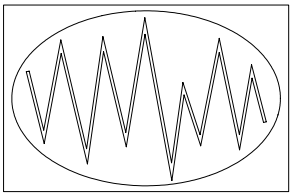

Severe electrical disturbances can sometimes upset the **Tempwise 2001** operating sequences. Operator confusion related to program parameters can also cause what may seem to be operational problems. Whenever there is any doubt as to the proper operation of the controller, Factory Default Parameters should be re-initialized.

Entering Program Mode

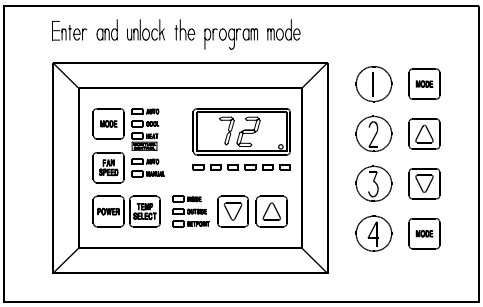

The program mode can only be entered from the off mode. From the off mode and in the following order, press the **Select**, **Up**, **Down** and the **Select** buttons. These buttons have to be pressed and released in the order given. The letter "**P**" appears in the display. The buttons have to be pressed in the sequence described. Remember **"SUDS"**... It's the key to enter and unlock the program mode. The characters "**P**" then "**P1**" followed by the parameter setting, appear in the display. The **Tempwise 2001** control is now in the program mode. Exit the program mode, to the off mode, by pressing and releasing the power button.

NOTE: The control will exit the program mode and return to the "**off**" mode if no programming is attempted for one (1) minute.

Restore Memorized Default Settings

IMPORTANT! The memorized default settings can be restored by entering the software ID program mode and setting P-16 to **rSt**. Exit the program mode and the software version number appears in the display. The memorized default settings are restored and the **Tempwise 2001** control returns to the **off** mode. The software version number is always displayed when you exit the program mode.

USING THE PROGRAM MODE

Increment from one program parameter to the next by pressing the **Mode Button** while in the program mode. Press and release the Mode Button to advance to the desired parameter. Use the up and down buttons to change the program parameter values. The programmable parameters range from P-1 through P-16.

Up and Down Buttons

The up and down buttons are used to select the data or set the desired limits for the parameter being programmed. This method is followed throughout the **program** mode, however, special instructions are included for individual functions as required.

Exiting the Program Mode

There are two methods to exit the **Program** mode. Press the power button and the **Tempwise 2001** control will return to the **Off** mode. Not pressing any buttons or attempting any program changes for sixty (60) seconds will allow the control to exit the **Program** mode to the **Off** mode. Any programming changes that were made while in the **Program** mode will be memorized and put into operation when the **Program** mode is exited and the control is returned to the **On** mode.

Software Identification

The software version of the control is identified for one (1) second prior to the exit from the program mode. The software identification number, i.e. "**A10**" will appear in the display for one second, then the control will return to the off mode.

Should there be any reason to contact Aqua-Air Manufacturing about the system or programming the Tempwise 2001 be sure to have the software identification number available.

PROGRAMMING

Programmable Parameters

There are eighteen (18) programmable parameter locations with their Factory Default Settings listed in this section. The table below indicates what these parameters are, along with the permitted values and the original Factory Default Settings.

Program Number	Description	Default	Range
P-1	High Fan Speed Limit (arbitrary units)	85	56 - 85
P-2	Low Fan Speed Limit (arbitrary units)	50	30 - 55
P-3	Compressor Staging Time Delay	15	5-135 seconds
P-4	Temperature Sensor Calibration	0	Ambient ± 10/F
P-5	Failsafe Modes and Mnemonic High Freon Pressure - - - HPF Low Freon Pressure - - - LPF Low AC line voltage - - - LAC	4 = 4 failures With 90 Second Re-start Delay Manual reset is required	Off 1= Continuous No Display 2= Continuous W/ Display 3 = 4 Failure Reset Required
P-6	Low AC Voltage Cut-Off	85 VAC (115V) 185 VAC (230V)	Off - 75 to 100 (115V Unit) Off - 175 to 200 (230V Unit)
P-7	De-Icing Cycle	0	0 = Off 1 - 3 Minutes
P-8	Pump Sentry ... Protects Pump and Compressor From Loss of Seawater	Off	Off On = Select 100/F to 150/F
P-9	Display Brightness Control	13 = Maximum	4 = Low 13 = Maximum
P-10	Display /F or /C	/F	/F = Fahrenheit Displayed /C = Celsius Displayed
P-11	Cycle Pump With Compressor or Continuous Pump Operation	OFF = Cycle with Compressor	OFF = Cycle with Comp. On = Continuous Operation
P-12	Reverse Fan Speeds in Heating Mode	rEF = Reversed	nor = Normal Fan Operation rEF = Reversed in Heating
P-13	Continuous Fan or Cycle Fan on Demand	con = Continuous Fan Operation	CYC = Cycle On Demand con = Continuous
P-14	Reverse Cycle Heating or Electric Heat Only Option Installed (cooling only units)	nor = Reverse Cycle Heat	nor = Reverse Cycle Heat ELE = Elect. Heat Installed
P-15	Fan Motor Type	SP = Shaded Pole	SP = Shaded Pole SC = Split Capacitor
P-16	Reset Memorized Programming Defaults	nor = Normal	nor = Normal rest = Reset Defaults

Should any programming problems or confusion occur, reset the memorized default settings by entering the program mode and setting P-16 to rest.

P-1: High Fan Limit

The upper fan speed limit can be tailored to suit various motors and operating conditions. The high fan limit is adjusted with the system installed and operational. The range of values are 56 through 85 and represent arbitrary units. Setting a higher number, results in a higher fan speed, setting lower numbers, lowers the high fan speed limit. Use the up and down buttons to select the desired high fan speed limit. The factory default setting is eighty-five (85).

P-2: Low Fan Limit

The low fan limit determines the lowest output allowed for the low fan speed. The range of values for the low fan speeds are 30 through 55, in arbitrary units. Use the up and down buttons to select the desired low fan speed limit. Setting a higher number, results in a higher fan speed, setting lower numbers, lowers the low fan speed limit. The factory default setting is 50.

IMPORTANT! Once the high and low fan speed limits are set, the unit will automatically readjust the remaining fan speeds to produce six (6) equally spaced in both the automatic and manual fan speeds modes.

P-3: Compressor Staging Time Delay

The compressor staging delay is provided for installations where more than one system is being operated from the same power source. Setting the staging delays at different intervals allows only one compressor to start at a time. The units should be staged at least five (5) seconds apart. The minimum delay is five (5) seconds and the maximum is one hundred thirty-five (135) seconds. The factory default setting is 15 seconds.

P-4: Temperature Calibration

Use this feature to calibrate the air sensor within a range of $\pm$ ten (10) /F. Enter the program mode and the ambient temperature appears in the display. Use the up and down keys to select the desired offset. The temperature in the display will increase or decrease according to the offset programmed. The factory default setting is zero.

P-5: Fail-safe Level

The system can be configured for one of four fail-safe levels. Selecting **OFF** turns off all

fail-safe protection and mnemonic display codes. Level one (1) shuts down the system, allows the system to restart after a 90 second delay and displays no failure code. Level two (2) shuts down the system allows continual restarts after the 90 second delay and displays the appropriate mnemonic failure code. Level three (3) operates the same as level two with the addition of a system shutdown after four (4) consecutive failures... Manual reset is required to restart the system.

P-6: Low AC Voltage Cut-Off

Tempwise 2001 can be programmed to protect the system against sustained low AC line voltage conditions. The compressor will be shut down and "LAC" flashed in the display if the line voltage goes below the programmed value for more than ten (10) minutes. Programmable values are 75 VAC to 100 VAC for 120 volt units and 175 VAC to 200 VAC for 220 volt systems. The factory default is 85 VAC for 120 volt units and 185 VAC for 220 volt systems. NOTE: Low Voltage Protection can be turned off by programming Off instead of selecting a voltage value.

P-7: De-Icing Cycle

The **Tempwise 2001** is equipped with a De-Icing Cycle to prevent ice build up on the evaporator coil during extended periods of cooling operation. Installation variables such as grille sizes, length of ducting, insulation R factors and ambient temperatures determine the cooling run time required to achieve set point. Customer usage may substantially increase run times by operating the system with the hatches and doors open. Programming unrealistic set point [55' F] and leaving the salon door open will usually cause the evaporator to ice up on warm muggy days.

De-Icing is accomplished by switching the reversing valve into the Heat Mode while the system is cooling. The valve will remain energized for the programmed cycle time. The cycle is programmable from OFF through a period of 3 minutes. The factory default setting is Off.

P-8: Optional Pump Sentry

The **Tempwise 2001** can be equipped with an optional temperature sensor that is used to monitor the condenser coil temperature. The sensor is plugged into the outside air sensor jack and parameter P-8 programmed for a temperature between 100/ and 150/ F depending on sea water temperature and the system type. When the coil temperature rises above the programmed value the pump and compressor are shut down and “PPP”

is flashed in the display. The factory default is Off, no pump sentry installed.

P-9: Display Brightness Control

The display brightness can be adjusted to suit ambient cabin lighting conditions. The allowed settings are four (4) to thirteen (13), with four (4) being the dimmest and thirteen (13) the brightest. Typically a dark cabin will require a setting of four or five. A very bright cabin will require a setting of twelve or thirteen. The factory default setting is thirteen (13).

P-10: Fahrenheit or Celsius Selection

The unit can be programmed to display either Fahrenheit or Celsius. Programming /F selects degrees Fahrenheit and programming /C displays degrees Celsius. The factory default setting is /F, Fahrenheit. When degrees Celsius (/C) is selected the readings are displayed in tenths, i.e. 22.2/.

P-11: Cycle Pump With Compressor

To increase pump life and conserve electricity the pump can be programmed to cycle on and off with the compressor. The pump can also be programmed to operate continuously whenever the system is on. To program the pump for continuous operation turn P-11 On. The factory default is **Off**, which cycles the pump with the compressor.

P-12: Reverse Automatic Fan Speeds During Heating

The automatic fan speeds can be reversed during the heating mode to improve personal comfort in cooler climates. The fan speed is decreased as the temperature spread increases. The fan will speed up as the set point is approached. Lowering the fan speed when the cabin is cold raises the supply air temperature. The fan switches to low speed when the set point is satisfied and the water valve cycles off. The fan can be programmed to operate the same as in cooling by programming P12 **nor** which represents normal fan operation during the heating cycle. The factory default is **rEF**, which reverses the automatic fan speeds during heating.

P-13: Cycle Fan with Compressor

The fan can be programmed to run continuously when the system is on or can be allowed to cycle with the compressor. When cycled with the compressor, the fan will operate only when heating or cooling is called for. To cycle the fan with the compressor select **CYC**

which stands for cycle the fan with the compressor. To operate the fan continuously select **con** which represents continuous fan operation. The factory default is [con] continuous fan operation when the system is on.

P-14: Reverse Cycle or Electric Heat

Units not equipped with reverse cycle heat may have an electric heater added. Electric heat requires the compressor be turned off when heating is called for. The reversing valve output is used to control the optional electric heating element contactor. The valve output relay can only carry 6 amps, therefore, a heavy duty contactor must be installed to carry the heater current. Program parameter **ELE** for the electric heat option. The factory default is **nor** which is normal reverse cycle heating.

P-15: Fan Motor Selection

There are two basic fan motor types, shaded pole (SP) and split capacitor (SC). Each motor reacts differently to speed control and each motor requires different timing for optimum fan speed variation. The default setting is "**SP**" which selects the shaded pole motor type, however, "**SC**" should be selected if a split capacitor type of fan motor is used. **Aqua-Air Manufacturing** supplies shaded pole type fan motors, therefore, the factory default selection is "**SP**".

P-16: Reset Memorized Defaults

The default programming parameters can be reset by entering the program mode and selecting "**rest**". This will restore the programmable parameters to the values selected when the system was shipped. The program parameters listed on page nine may be altered by **Aqua-Air Manufacturing**, the installing dealer or the end user. Once new defaults are entered (see page 7, dual button functions) and memorized the new defaults will be reset. The original factory programmable parameters as listed on page nine (9) will have to be restored manually.

Why Memorize New Defaults?

Once the desired programming changes have been made and the system tests satisfactorily, your work can be saved as the new factory defaults. Your new defaults are initiated by simultaneously pressing and releasing the up and down buttons prior to exiting the program mode. New defaults can be initialized at any time by entering the program

mode and following the above instructions. Once new defaults have been initialized the control will revert back to the new defaults whenever factory defaults are restored as described on page 10 of this manual.

FAIL-SAFE AND FAULT HANDLING CODES

When a fault is detected **Tempwise 2001** will display one of the following Mnemonic fault codes:

HPF...Indicates high Freon pressure. Fifteen (15) second Delay... Ignored in Heat Mode.
LPF...Indicates low Freon pressure. Ten (10) minute charge time delay.
LAC...Indicates low AC line power
AAA...Indicates failed air sensor. Unit will not run until repaired.
PPP...Indicates the sea water pump has failed.

Fail-Safe

There are four levels of fail-safe protection including the fail-safe **off mode.** Level one monitors the sensors, takes appropriate action and allows continuous restarts after a 90 second delay... **Does not display the fault code.** Level two works the same as level one, however, the appropriate fault code mnemonic is displayed during the time-out between restarts. Level three is identical to level two with the inclusion of a three successive failures lockout routine. After four (4) consecutive failures the system is shut down and a manual reset is required.

Lockout

Lockout occurs if P-5 is programmed for level 3 and four consecutive faults are detected within a heating or cooling cycle. Lockout causes the system to shut down and flash the mnemonic fault code. Lockout can only be cleared by turning the unit **off**, then **on** using the **Power** button.

Fault Display

When a fault occurs the appropriate mnemonic code is flashed in the display. The flashing mnemonic can be removed from the display by pressing and releasing the **power button** to reset the control. Resetting the control does not solve the problem that caused the fault!

Failsafe Level	Action	Description of Action Taken
OFF	All Protection Turned Off	FAILSAFE PROTECTION LEVELS TURNED OFF: Air Sensor Fault: Heating/Cooling Immediately Suspended; Normal Operation Not Resumed Until Fault is Cleared. Air Sensor Fault Code "Flashing Display" NO OTHER FAILSAFE PROTECTION PROVIDED.
1	No Mnemonic Fault Code Displayed Continuous 90 Sec. Re-starts Allowed	MINIMUM PROTECTION LEVEL: All Actions Taken in Failsafe Protection Level "0" PLUS: In Addition, Continuous 90 Second Compressor Restarts Allowed. FAULT Mnemonic CODE NOT DISPLAYED NO OTHER FAILSAFE PROTECTION PROVIDED.
2	Display Fault and Shutdown Compressor with continuous 90 Second Delay Between Restarts	INTERMEDIATE PROTECTION LEVEL: All Actions Taken in Failsafe Protection Level "0" & Level "1 " Plus: In Addition the FAULT MNEMONIC CODE Message Will Be Displayed With Continuous 90 Second Compressor Restarts Allowed. NO OTHER FAILSAFE PROTECTION PROVIDED.
3	Display Fault & Require Manual reset after 4 failures	MAXIMUM PROTECTION LEVEL: FAULT CODE MESSAGES ARE DISPLAYED and the Appropriate Action is Taken According to The Problem Encountered. After 4 Consecutive Failures Manual Reset is Required.

AUTOMATED FACTORY-SELF TEST PROGRAM

Self-Test Mode

The **Tempwise 2001** software contains a self-test program to facilitate factory testing of the entire air-conditioning system. Once the self-test mode is activated, the test cycle will continue until the AC power is interrupted or the on/off button is pressed once which returns the system to the off mode.

Activate the self-test by pressing and holding the on/off button while turning on the AC power. Be sure to continue to hold the button until the power on reset is completed. The **Tempwise 2001** is now in the self-test mode.

Once activated the self-test software will continuously execute the following procedure:

1- Turn on in the heat mode and supply heating for ten (10) minutes.

2 - Stop heating and run the fan only for five (5) minutes.

3 - Switch to cooling and continue cooling for ten (10) minutes.

4 - Stop cooling and run the fan only for five (5) minutes.

5 - Return to step one (1) and continue until interrupted.

The test mode will continue until the power is interrupted or the test is halted by pressing the on/ off button once.

Service Tools

Hour Meter

Total compressor cycle time is saved in EEPROM every 6 minutes of continuous compressor running time. Cycles less than 6 minutes will be discarded to conserve memory and allow the most flexible hour-meter possible.

To view the hour meter turn off the power at the AC breaker and hold the down button depressed. While depressing the down button, restore AC power. After the Power-On reset routine is complete, the following will appear in the display:

1. The hour meter mnemonic [Hr] is displayed for one (1) second.

2. The display blanks out for one second and then displays the THOUSANDS units for three (3) seconds.

3. The display blanks out for one (1) second and then displays the hours for three (3) seconds.

4. The unit returns to the last operating state before power was removed.

Maximum recorded time is 10,000 hours. The hour meter stops at maximum (10,000 hrs) and can only be reset by Aqua Air Manufacturing.

Service History

Tempwise 2001 will record and remember the last eight (8) service problems or service faults detected. Each time a fault is detected, a one hour timer is started. During that hour the same recurring fault will not be recorded. Should a different fault be detected during that hour, it will be entered into the service history log.

The following events are entered into the service history log:

1. High Freon Pressure
2. Low Freon Pressure
3. Air Sensor Fault
4. Low AC Voltage
5. Pump or Loss of Sea Water Fault

To view the service log turn off the AC power and depress the **Mode** Button. With the **Mode** Button depressed turn on the AC power. Once Power-On reset is completed, the display will flash the most recent mnemonic for the fault detected, followed by the event number. To view the other events detected press either the up or down buttons.

To exit the service history log press the power or the Mode Button or wait 30 seconds without pressing any buttons.

The service log can be cleared by simultaneously pressing the power and down buttons while you are viewing the service log mode.

SPECIAL HARDWARE INSTRUCTIONS

Outside Air Sensor Option

When this option is installed, the outside air sensor is plugged into the **outside air sensor jack** (32) and the feature is ready for use. The outside air temperature can be viewed, during normal operation, by simultaneously pressing the up and down buttons or selecting the Outside LED with the Temp Select Button. No special programming is required for installation of the Optional Outside Air Sensor.

Pump Sentry Option

Tempwise 2001 can be equipped with an optional temperature sensor that is used to monitor condenser coil temperature. The sensor is plugged into the outside air sensor jack and parameter P-8 programmed for a temperature between 100 and 150/F, depending on the seawater temperature and the system type. When the coil temperature rises above the programmed value the pump and compressor shut down and **"PPP"** is flashed in the display. The Pump Sentry follows the programmed fail-safe protocol as described on page 13 of this manual. The factory default is **Off**, no pump sentry installed.

IMPORTANT! When the Optional Pump Sentry is installed the outside air sensor option is NOT available.

High and Low Freon Pressure Inputs

A three pin Molex jack **JP5** is supplied on the main board for high and low Freon Pressure Inputs. Jumper **JP6** is used to emulate the Low Freon Pressure Switch when it is not installed. Cutting **JP6** when the **Low Freon Pressure Switch** is installed automatically configures the system to monitor the low pressure input.

Bimini Jumpers

The **Tempwise 2001** is equipped with four (4) emergency operation jumpers... Fan, Water Valve, Auxiliary Fan and Heater. Should any of these outputs fall, the output can be forced On by moving the jumper to the position indicated below.

CAUTION! Allowing the **Tempwise 2001** to operate with any or all of the outputs forced **On** while unattended can cause serious damage to the air conditioning system and/or vessel.

Do not leave the cabin unattended while any of the outputs are forced On.

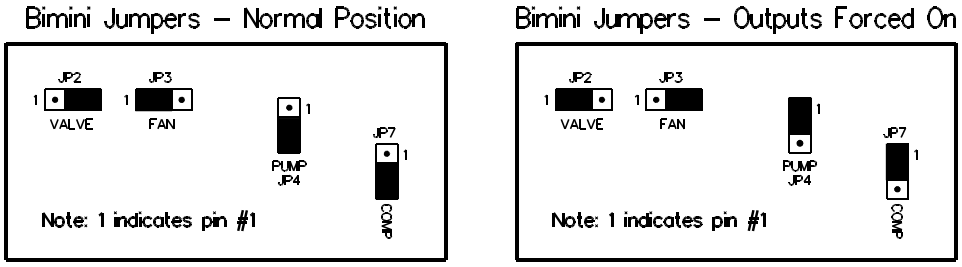

Figure 4: Bimini Jumpers Settings

Specifications

SET POINT RANGE	55/F - 85/F
TEMPERATURE RANGE DISPLAYED	0/F - 150/F
SENSOR ACCURACY	±2/F @ 77/F
LOW VOLTAGE LIMIT - 115V UNITS	75VAC
LOW VOLTAGE LIMIT - 230V UNITS	175VAC
LOW VOLTAGE PROCESSOR RESET	65VAC
LINE VOLTAGE	115 - 230VAC
FREQUENCY	50-60 Hz
FAN CIRCUIT RATING	6A @ 230V
VALVE CIRCUIT RATING	1/4A @ 230V
PUMP CIRCUIT RATING	6A @ 230V
HEATER CIRCUIT RATING	20A @230V
MINIMUM OPERATING TEMPERATURE	0/F
MAXIMUM OPERATING TEMPERATURE	180/F
MAXIMUM RH CONDITIONS	99% non-condensing
POWER CONSUMPTION	Less than 5 Watts

Operating Temperatures

Set Point	55 to 85/F	15.6 to 29.4/C
Display Range	0 to 150/F	-17.8 to 65.6/C
Air Sensor Temperature	0 to 150/F	-17.8 to 65.6/C

Dimensions

Display Panel	5.13"W x 4.125"H
Panel Cut Out	4.56"W x 3.375"H

(Continued next page)

Cable Lengths[1]

Display	15' std. Optional to 50'
Air Sensor	7' std. Optional to 50'
Water Sensor	7' std. Optional to 50'

System Inputs

Inside Air Temperature Sensor
Water Inlet Temperature Sensor

[1]**NOTE**: Maximum length of display cable is fifty (50) feet. Sensor cable lengths should be limited to 50 feet. The outside air sensor is an optional item not available on all models and is not included with the standard control package.

Basic System Start-up Problems

PROBLEM	PROBABLE CAUSE	SOLUTIONS
• No lights in the display and the system does not heat or cool. Power on reset does not occur when AC power is applied.	• AC breaker is not turned on or AC power is not available. • Display cable or jacks broken or dirty. • Display cable is improperly assembled. • AC input is less than 75 VAC.	• Check for AC power at circuit breaker. • Check for AC power at module inputs. • Clean all jacks and plugs. • Try another known good display cable. • Check for proper AC and system wiring.
• The system operates but there is no compressor and no heat or cool lights.	• The set point is satisfied.	• Raise or lower the set point to allow the unit to cycle.
• The display toggles between **AAA** and zero (**0**), and the system will not run.	• The air sensor is shorted or the display cable has been shorted or damaged. • The air sensor is open or the display cable is broken.	• Clean all plugs and jacks. • Try an alternate air sensor. • Try a known good display cable. • Check the existing display cable for screws, staples and other damage.
• System displays room temperature but there is no fan or compressor operation.	• Set point is satisfied and P-13 is programmed to cycle the fan on demand. • See page 12 of this manual.	• Raise or lower the set-point temperature to allow the system to cycle on... Check P-13.

• The system runs but there is no cooling or heating, the compressor cycles on and off and eventually the AC breaker trips.	• The seawater valve is closed. • The seawater strainer is clogged. • The seawater pump is air-bound. • The seawater pump is inoperable.	• Open the seawater valve. • Clean the strainer. • Bleed the air from the system. • Check wiring, replace pump if necessary.
• The system operates but the fan does not operate. • The fan runs but only in high speed, lower speeds are not available. • The fan runs very slow and is noisy.	• The fan wiring is incorrect. • Ducting is restricted or fan is miswired or triac has failed in closed mode. • Fan triac has failed or motor is defective.	• Check and correct fan motor wiring. • Check for proper duct sizes, correct any duct restrictions and check wiring. Return the module for fan output triac replacement. • Check fan motor and replace triac or return module for repair or call for service.

Advanced Tempwise 2001 System Problems

PROBLEM	PROBABLE CAUSE	SOLUTIONS
• System runs continuously and is not able to achieve set-point.	• Set-point temperature set too low. • Low Refrigerant charge. • Outside air sensor plugged into the alternate air sensor jack.	• Raise the set point to the 68// 72/F range. • Add refrigerant as required. • Check the module board and plug the outside air sensor into the proper jack.
• System short cycles and display indicates low temperatures.	• Supply air vent is blowing directly on display face plate.	• Re-direct the air guide vanes, relocate the display or install an alternate air sensor.
• Evaporator coil is icing up during the cooling cycle.	• Duct is restricted. • Set-point temperature is set too low. • Low fan speed is programmed too low... P-2.	• Check and repair ducting • Raise the set point to the 68/72/F range. • Raise the low fan speed parameter... P-2.
• All eights (888) appear in the display on start-up and the system operates normally.	• Power on reset indicating all LED's are OK and the system is functional.	• This is the normal boot-up routine and occurs when the AC power is first applied.

• The AC breaker trips when switching from shore to ships power. Applies to vessels with two or more staged chillers modules on board.	• Multiple stage chiller compressor time delays are not set, or are all set at he same value.	• Enter the programming mode and set the staging delay at least 5 seconds apart.
• Pump cycles on and off with compressor.	• Normal... The pump is programmed to cycle with compressor. P-11 is programmed Off.	• None required. Normal operation.
• Unit rips the AC breaker during heating but runs fine in cooling mode.	• The compressor is overloaded. This is usually caused by high temperature seawater, low fan speed settings, duct restrictions or a combination of these.	• Raise the low fan speed setting to 49. • Reverse fan speed during heating... P-14 (reF) • Check for proper sizing of grills, duct work.

Tempwise 2001 Stuck Button Chart

Stuck Button	Display Behavior
POWER	Display will indicate “888" on Power-Up and operate in the Self Test Mode from Both the On and Off Modes.
SELECT	The display will enter the trouble log... VIEW HISTORY MODE. The last fault logged will be displayed, whether you are in the On or Off mode. The system will not operate and continue to display the last fault logged.
UP	From the **Off** Mode, the control will reset (“888") and the display will go blank. From the **On** Mode, the display will not reset, ambient temperature is displayed, all outputs work but no buttons work.
DOWN	From the On mode, Displays Compressor Run Time, enters normal operation, all outputs function but no buttons work. From the Off mode, indicates the Compressor Run Time, the Display goes blank and no buttons work.

Tempwise 2001 Display Cable Troubleshooting Guide

Display Problem	Possible Causes
No display and the buttons will not work.	- The cable is assembled backwards. - Pin 1 is open - Pin 3 is open
No buttons, no display but the fan is running.	- Pin 5 is open - Check Bimini jumper for proper location
No relays turning on, display is on, buttons operate and fan is running.	- Pin 2 is open - Pin 1 and Pin 2 are shorted - Pin 4 is open
No fan output.	- Pin 6 is open
All the relays are on, no fan operation and no display.	- Pin 2 and Pin 3 are shorted

I:\wordpfct\80998-21dx.wpd
J:\pdf\80998-21dx.pdf

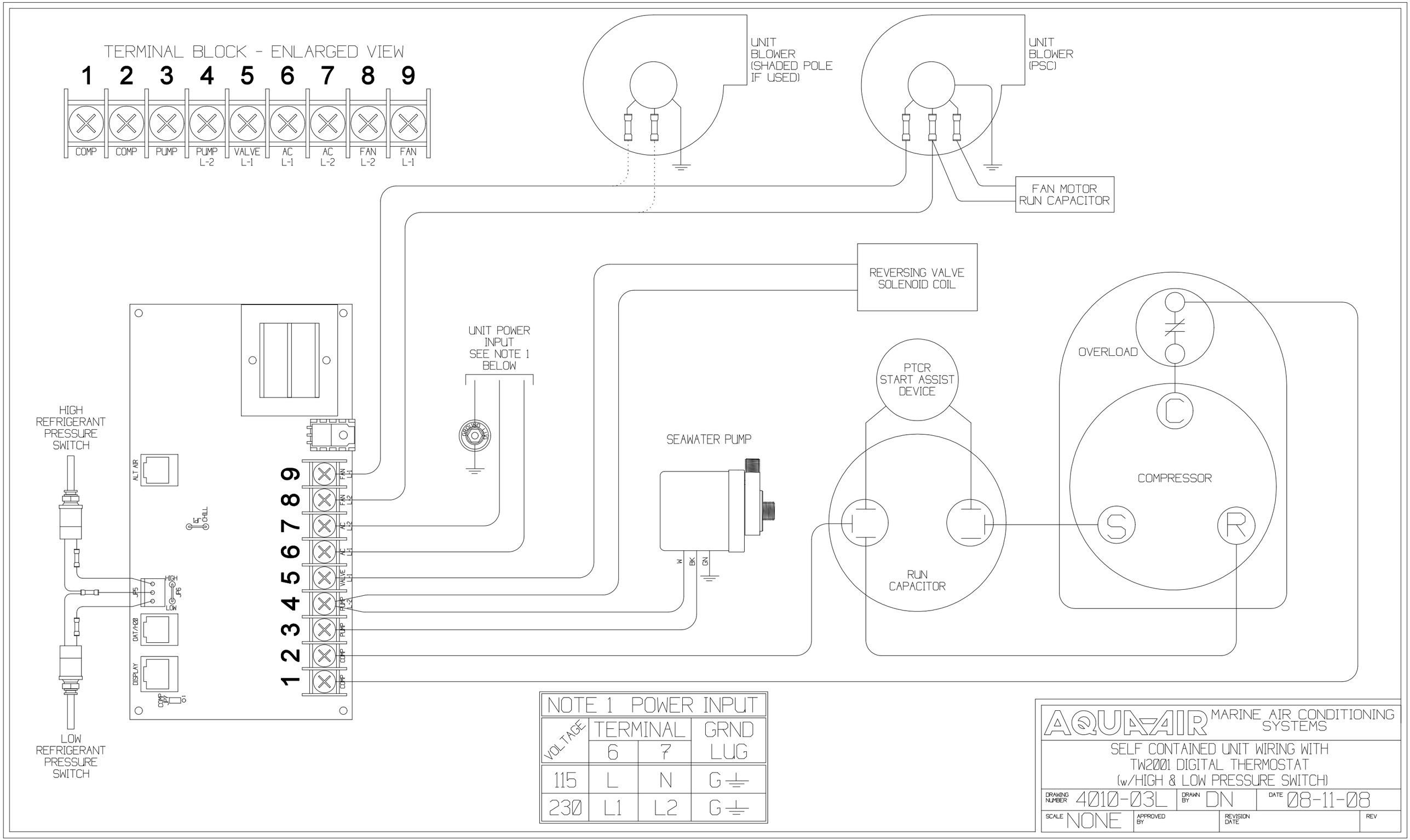
TERMINAL BLOCK - ENLARGED VIEW
1 2 3 4 5 6 7 8 9
COMP
COMP
PUMP
PUMP L-2
VALVE L-1
AC L-1
AC L-2
FAN L-2
FAN L-1
UNIT BLOWER (SHADED POLE IF USED)
UNIT BLOWER (PSC)
FAN MOTOR RUN CAPACITOR
REVERSING VALVE SOLENOID COIL
UNIT POWER INPUT SEE NOTE 1 BELOW
GROUND LUG
HIGH REFRIGERANT PRESSURE SWITCH
LOW REFRIGERANT PRESSURE SWITCH
ALT AIR
CHILL
HIGH
LOW
JP5
JP6
OAT/H20
DISPLAY
COMP
JP7
1 2 3 4 5 6 7 8 9
FAN L-1
FAN L-2
AC L-2
AC L-1
VALVE L-1
PUMP L-2
PUMP
COMP
COMP
SEAWATER PUMP
W
BK
GN
PTCR START ASSIST DEVICE
RUN CAPACITOR
OVERLOAD
COMPRESSOR
S
R
NOTE 1 POWER INPUT
VOLTAGE
TERMINAL 6
TERMINAL 7
GRND LUG
115 L N G
230 L1 L2 G
AQUA-AIR MARINE AIR CONDITIONING SYSTEMS
SELF CONTAINED UNIT WIRING WITH TW2001 DIGITAL THERMOSTAT (w/HIGH & LOW PRESSURE SWITCH)
DRAWING NUMBER 4010-03L
DRAWN BY DN
DATE 08-11-08
SCALE NONE
APPROVED BY
REVISION DATE
REV

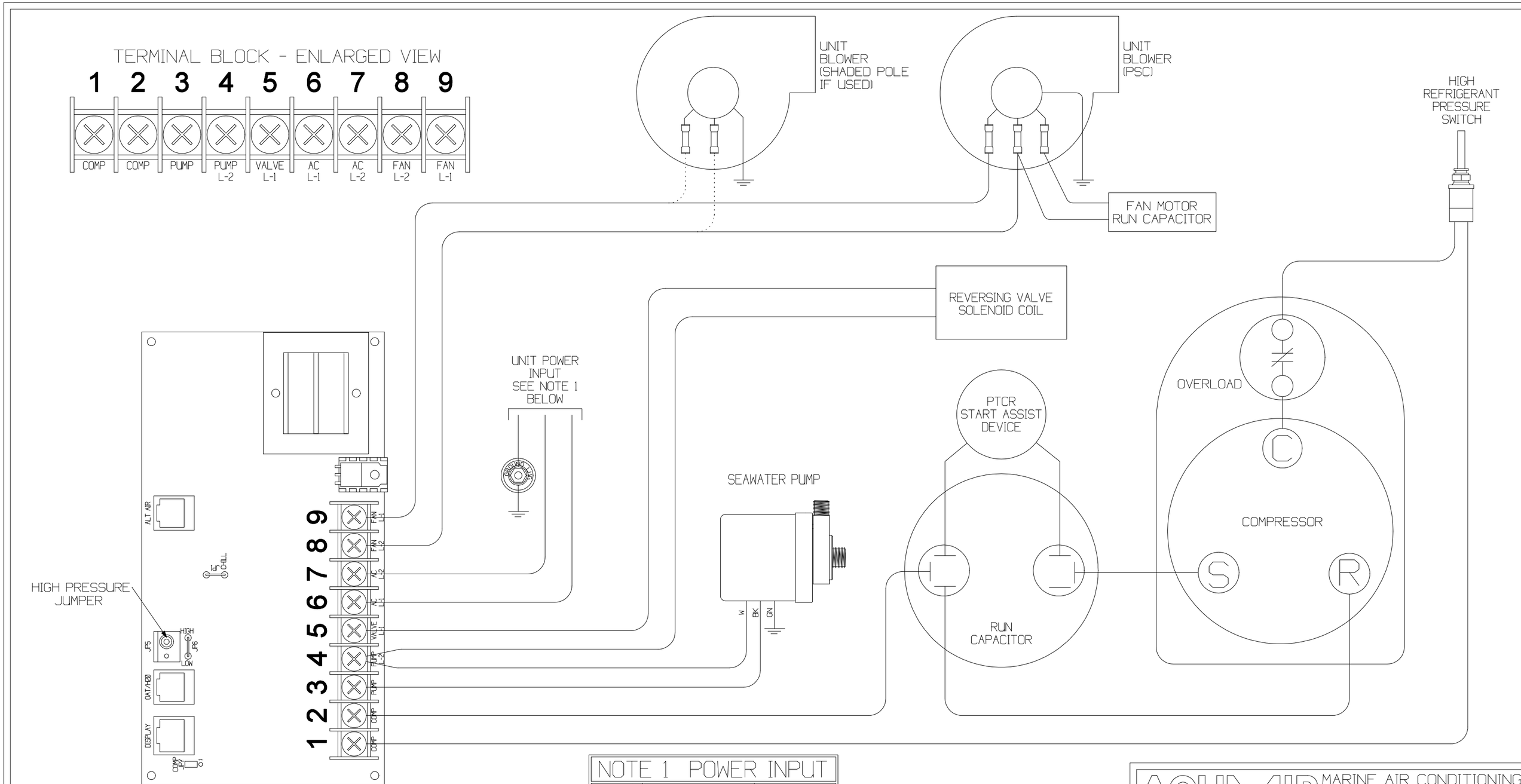

NOTE 1 POWER INPUT			
VOLTAGE	TERMINAL 6	TERMINAL 7	GRND LUG
115	L	N	G ⏚
230	L1	L2	G ⏚

AQUA-AIR MARINE AIR CONDITIONING SYSTEMS

SELF CONTAINED UNIT WIRING WITH TW2001 DIGITAL THERMOSTAT (w/HIGH PRESSURE JUMPER)

DRAWING NUMBER 4010-03M	DRAWN BY SB	DATE 08-11-08	
SCALE NONE	APPROVED BY DN	REVISION DATE	REV

TERMINAL BLOCK - ENLARGED VIEW

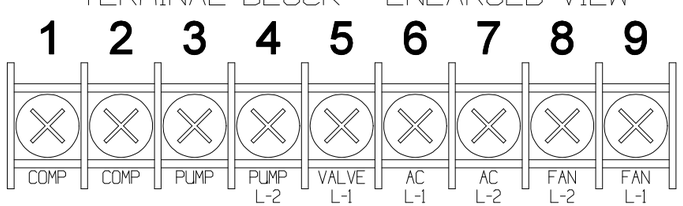

FAN COIL UNIT
VOLTAGE SAME AS SYSTEM VOLTAGE

UNIT POWER INPUT SEE NOTE 1 BELOW

REVERSING VALVE SOLENOID COIL

SEAWATER PUMP
VOLTAGE SAME AS SYSTEM VOLTAGE

HIGH REFRIGERANT PRESSURE SWITCH

LOW REFRIGERANT PRESSURE SWITCH

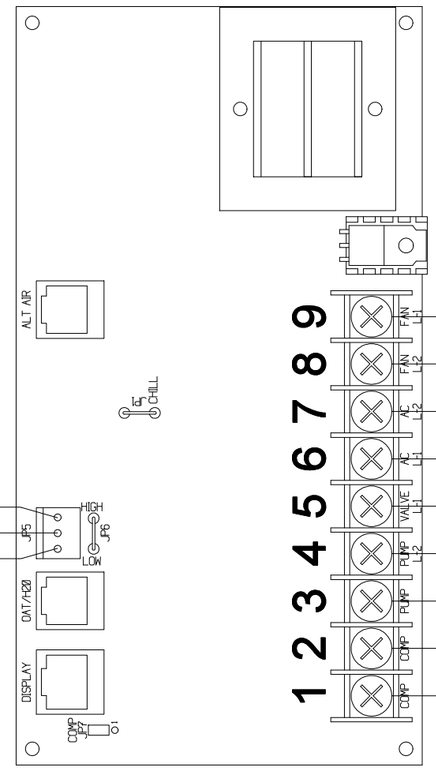

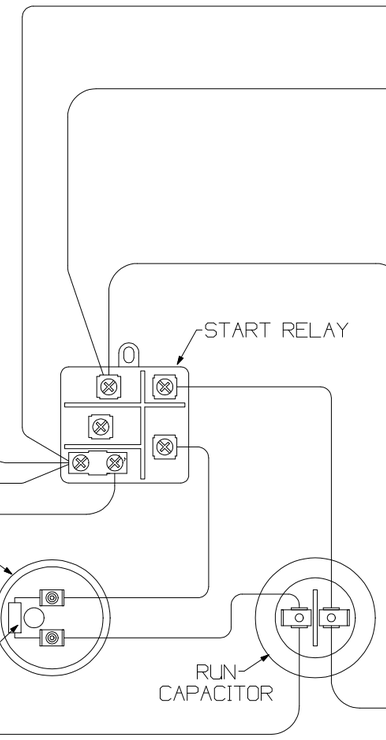

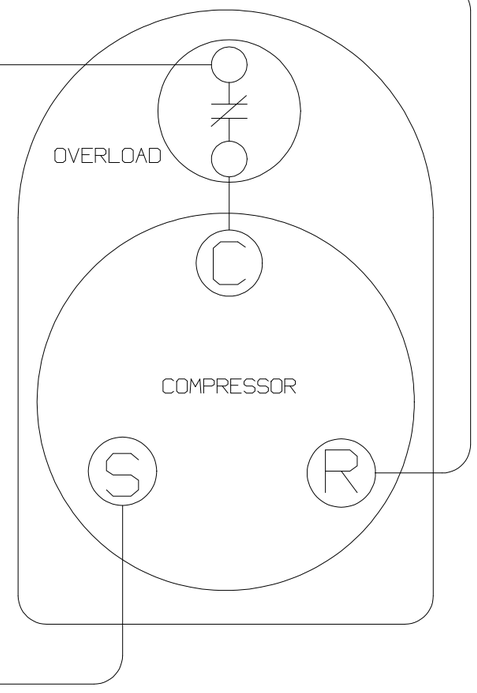

NOTE 1 POWER INPUT			
VOLTAGE	TERMINAL 6	TERMINAL 7	GRND LUG
115	L	N	G ⏚
230	L1	L2	G ⏚

AQUA-AIR MARINE AIR CONDITIONING SYSTEMS

CONDENSING UNIT WIRING WITH TW2001 DIGITAL THERMOSTAT (w/HIGH & LOW PRESSURE SWITCH)

DRAWING NUMBER	DRAWN BY	DATE
4009-47B	SB	08-11-08

SCALE	APPROVED BY	REVISION DATE	REV
NONE	DN		

TERMINAL BLOCK - ENLARGED VIEW

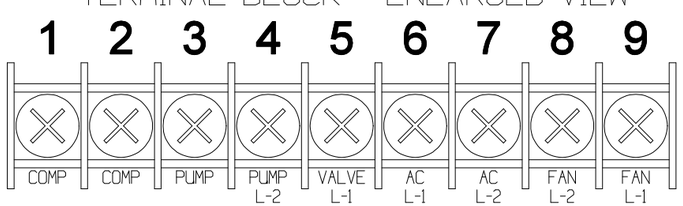

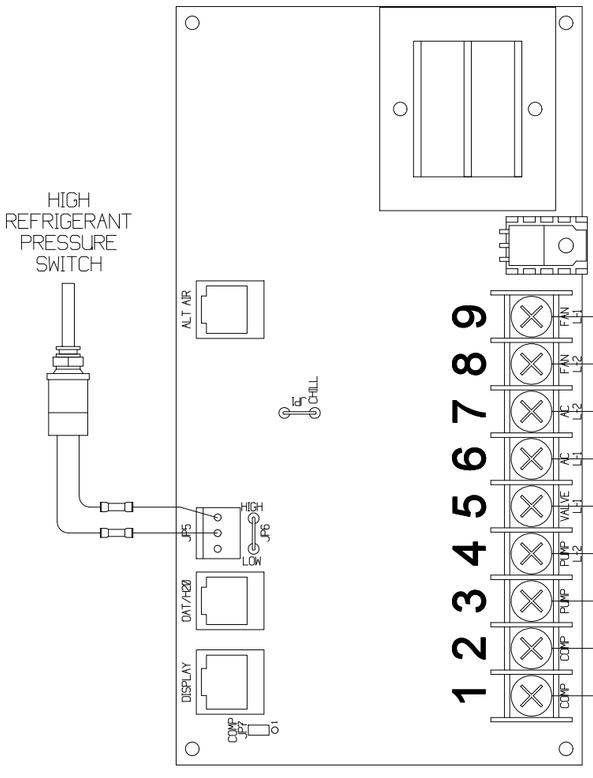

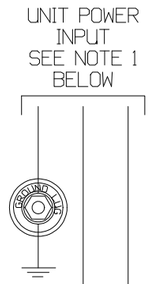

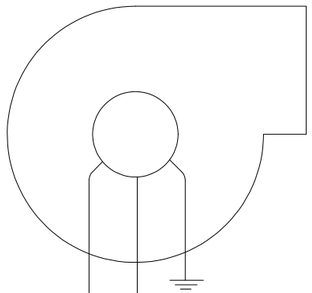

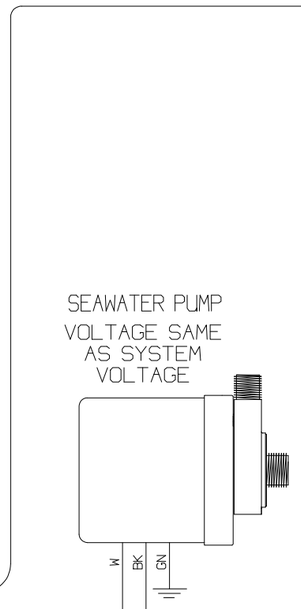

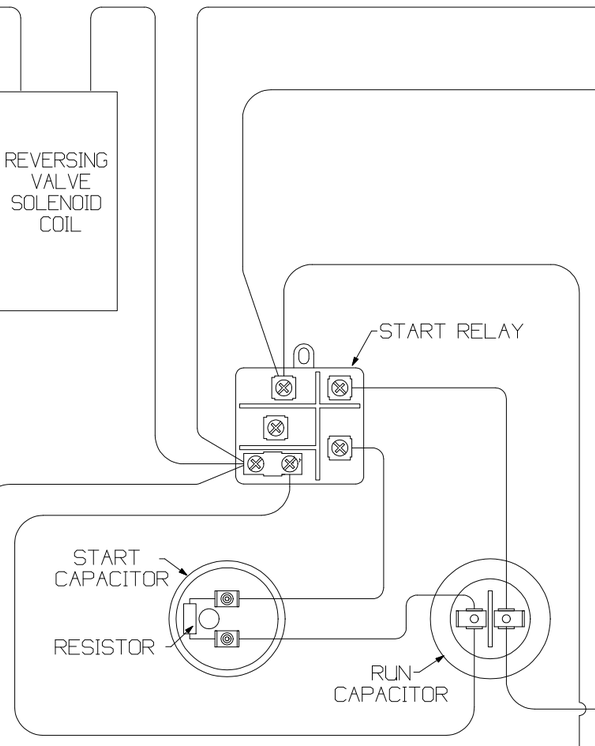

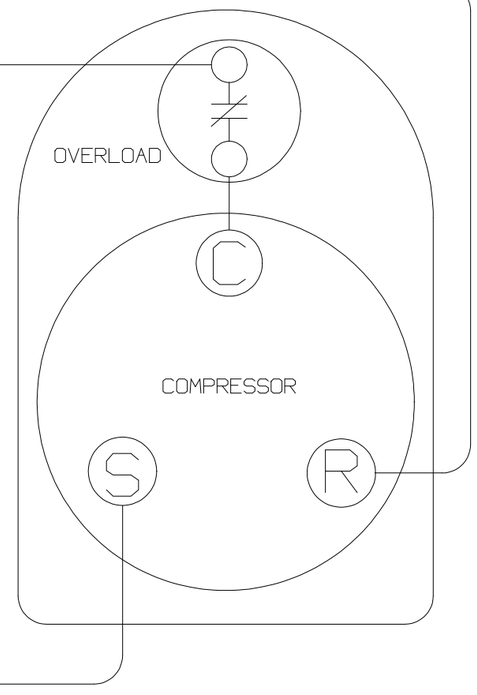

NOTE 1 POWER INPUT			
VOLTAGE	TERMINAL 6	TERMINAL 7	GRND LUG
115	L	N	G ⏚
230	L1	L2	G ⏚

AQUA-AIR MARINE AIR CONDITIONING SYSTEMS

CONDENSING UNIT WIRING WITH
TW2001 DIGITAL THERMOSTAT
(w/o LOW PRESSURE SWITCH)

DRAWING NUMBER	DRAWN BY	DATE
4009-47C	SB	08-11-08

SCALE	APPROVED BY	REVISION DATE	REV
NONE	DN		